C DIV S 125 FT OF W 1/2 OF LOT 2
DIV & BEG SE COR BLK 35, CENTRAL
LINE BLK 35, 104.40 FT W 100 FT,

PIERCE TERESA NICOLE
209 SE SAINT JOHNS ST
LAKE CITY, FL 32025

2026

00-00-00-12738-002

COLUMBIA COUNTY PROPERTY

BUILDING CHARACTERISTICS

ELEMENT	CD	CONSTRUCTION
Exterior Wall	04	SINGLE SID 90
Exterior Wall	15	CONC BLOCK 10
Roof Structur	03	GABLE/HIP 100
Roof Cover	03	COMP SHNGL 100
Interior Wall	03	PLASTER 100
Interior Floo	14	CARPET 90
Interior Floo	06	VINYL ASB 10
Air Condition	03	CENTRAL 100
Heating Type	04	AIR DUCTED 100
Bedrooms		3 100
Bathrooms		1 100
Frame	01	NONE 100
Stories	1.	1. 100
Architectual	05	CONV 100
Units		0 100
Condition Adj	03	03 100
Kitchen Adjus	01	01 100
Quality	05	05
DOR CODE	0100	SINGLE FAMILY
MAP NUM		MKT AREA 06
NEIGHBORHOOD/LOC	850317.00	1.00/

AREA TYPE	TOTAL GROSS AREA	PCT OF BASE	YEAR	TOT ADJ AREA	SUBAREA MARKET VALUE
BAS	1,444	100		1,444	99,802
FEP	180	80		144	9,953
FEP	255	80		204	14,099
UDG	428	55		235	16,242
UOP	180	20		36	2,488
UST	65	45		29	2,005
TOTALS	2,552			2,092	144,587

MARKET ADJUSTMENTS

TYPE	MDL	EFF. AREA	TOT ADJ PTS	EFF. BASE RATE	REPL. COST NEW	AYB	EYB	ECON	FNCT		NORM	% COND
0100	01	2,092	94.9410	106.33	222,442	1945	1945	0	0	0	35.00	65.00

1 SINGLE FAM 100% - 2023 Heated Area: 1444 HX Base Yr 2023

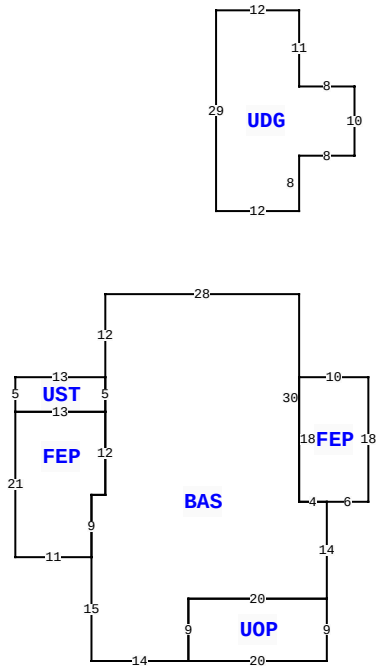

209 SE SAINT JOHNS ST, LAKE CITY

BLD DATE		LGL DATE	
XF DATE		LAND DATE	04/27/2022 MLU
INC DATE		AG DATE	

VALUATION SUMMARY

VALUATION BY		STANDARD
Tax Group: 1	Tax Dist:	
BUILDING MARKET VALUE		144,587
TOTAL MARKET OB/XF VALUE		0
TOTAL LAND VALUE - MARKET		22,346
TOTAL MARKET VALUE		166,933
SOH/AGL Deduction		17,170
ASSESSED VALUE		149,763
TOTAL EXEMPTION VALUE	HX HB	50,722
BASE TAXABLE VALUE		99,041
TOTAL JUST VALUE		166,933
NCON VALUE		0
INCOME VALUE		
PREVIOUS YEAR MKT VALUE		166,933

PERMIT NUM	DESCRIPTION	AMT	ISSUED

SALES DATA

OFF RECORD Number	DATE	TYPE INST	Q U	V I	RSN CD	SALE PRICE
1442/1228	7/15/2021	WD	Q	I	01	135,000
GRANTOR: JOHNDROW SCOTT H &						
GRANTEE: PIERCE TERESA NICOL						
1348/1843	11/17/2017	WD	Q	I	01	87,000
GRANTOR: SOR POPERTIES LLC						
GRANTEE: SCOTT H JOHNDROW &						

BUILDING NOTES

BUILDING DIMENSIONS

BAS= W28 S12 UST= W13 S5 E13 N5$ S5FEP= W13 S21 E11 N9 E2 N12$ S12 W2 S9 S15 E14 UOP= E20 N9W20 S9$ N9 E20 N14 FEP= E6 N18 W10 S18 E4$ W4 N30$ PTR= N30 UDG= N11 W12 S29 E12 N8 E8 N10 W8$ S30$.

EXTRA FEATURES

LN	OB/XF CODE	DESCRIPTION	BLD	CAP	L	W	UNITS	UT	Adj R	ADJ UNIT PRICE	ORIG COND	YEAR ON	YEAR ACTUAL	Q	% COND	OB/XF MKT VALUE	NOTES

LAND DESCRIPTION

TOTAL OB/XF 0

LN	USE CODE	CLS	LAND USE DESCRIPTION	CAP	RD	LOC ZONE	FRONT	DEPTH	TOT LND UTS	UNIT TYPE	DT	DPTH FACT	% COND	TOT ADJ	UNIT PRICE	ADJ UNIT PRICE	LAND VALUE	OTHER ADJUSTMENTS AND NOTES	YEAR	DENSITY	DECL	FRZ	YR	CONSRV
1	0100	C	SFR	100		RO	205.00	115.00	23,522.40	SF		1.00	1.00	1.00	0.95	0.95	22,346							

REVIEW DATE 11/08/2016 BY DF Total Acres: 0.54 Total Land Value: 22,346 Market: 0 Agricultural: 0 Common: 22,346 PRINTED 11/18/2025 BY SYS