C DIV: ALL BLOCKS 23 & 24, EX TH
THE N 140 FT FOR COURTHOUSE ANNE
E DIV: BLOCKS 248 & 249. EX .23

**FIRST BAPTIST CHURCH OF LAKE CITY**
182 NE JUSTICE ST
LAKE CITY, FL 32055

# 2026

**00-00-00-12696-000**

## COLUMBIA COUNTY PROPERTY



## BUILDING CHARACTERISTICS

| ELEMENT | CD | CONSTRUCTION |
|---|---|---|
| Exterior Wall | 19 | COMMON BRK 100 |
| Roof Structur | 03 | GABLE/HIP 100 |
| Roof Cover | 14 | PREFIN MT 100 |
| Interior Wall | 03 | PLASTER 100 |
| Interior Floo | 14 | CARPET 100 |
| Ceiling | 02 | F.NOT SUS 100 |
| Air Condition | 03 | CENTRAL 100 |
| Heating Type | 04 | AIR DUCTED 100 |
| Fixtures | | 23 100 |
| Frame | 03 | MASONRY 100 |
| Story Height | | 10 100 |
| RMS | | 50 100 |
| Stories | 3. | 3. 100 |
| Units | | 0 100 |
| Condition Adj | 03 | 03 100 |
| Quality | 05 | 05 |
| DOR CODE | 7100 | CHURCHES-EX |
| MAP NUM | | MKT AREA 06 |
| NEIGHBORHOOD/LOC | 850317.00 | 1.00/ |

| AREA TYPE | TOTAL GROSS AREA | PCT OF BASE | YEAR | TOT ADJ AREA | SUBAREA MARKET VALUE |
|---|---|---|---|---|---|
| BAS | 3,145 | 100 | | 3,145 | 111,585 |
| BAS | 8,983 | 100 | | 8,983 | 318,717 |
| BAS | 8,983 | 100 | | 8,983 | 318,717 |
| CAN | 400 | 30 | | 120 | 4,258 |
| CAN | 744 | 30 | | 223 | 7,912 |
| CAN | 744 | 30 | | 223 | 7,912 |
| UOP | 254 | 20 | | 51 | 1,810 |
| UOP | 254 | 20 | | 51 | 1,810 |
| UST | 338 | 40 | | 135 | 4,790 |
| TOTALS | 23,845 | | | 21,914 | 777,508 |

## MARKET ADJUSTMENTS

| TYPE | MDL | EFF. AREA | TOT ADJ PTS | EFF. BASE RATE | REPL. COST NEW | AYB | EYB | ECON | FNCT | | NORM | % COND |
|---|---|---|---|---|---|---|---|---|---|---|---|---|
| 9100 | 04 | 21,914 | 92.1500 | 70.96 | 1,555,017 | 1945 | 1985 | 0 | 0 | 0 | 50.00 | 50.00 |

1 CHURCH 0% - 0 Heated Area: 21111 HX Base Yr

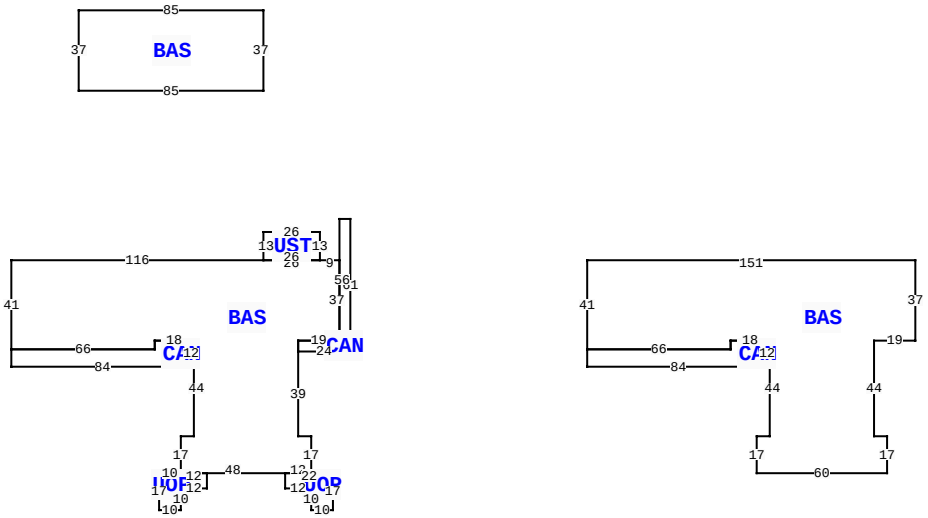


182 NE JUSTICE ST, LAKE CITY

| | | | |
|---|---|---|---|
| BLD DATE | | LGL DATE | |
| XF DATE | | LAND DATE | 04/09/2024 MLU |
| INC DATE | | AG DATE | |

## VALUATION SUMMARY

| | | |
|---|---|---|
| VALUATION BY | | STANDARD |
| Tax Group: 1 | Tax Dist: | |
| BUILDING MARKET VALUE | | 1,325,166 |
| TOTAL MARKET OB/XF VALUE | | 4,300 |
| TOTAL LAND VALUE - MARKET | | 676,920 |
| TOTAL MARKET VALUE | | 2,006,386 |
| SOH/AGL Deduction | | 0 |
| ASSESSED VALUE | | 2,006,386 |
| TOTAL EXEMPTION VALUE | 02 | 2,006,386 |
| BASE TAXABLE VALUE | | 0 |
| TOTAL JUST VALUE | | 2,006,386 |
| NCON VALUE | | 0 |
| INCOME VALUE | | |
| PREVIOUS YEAR MKT VALUE | | 2,028,022 |

| PERMIT NUM | DESCRIPTION | AMT | ISSUED |
|---|---|---|---|
| 000046127 | Roof Replacement | 65,118 | 12/16/2022 |
| 18-070 | MAINT/ALTR | 0 | 02/12/2018 |
| 22 | MAINT/ALTR | 115 | 02/02/2007 |
| 3542 | DEMOLISH | 50 | 01/06/2006 |
| 091 | CHURCH | 467,710 | 12/21/1992 |

## SALES DATA

| OFF RECORD Number | DATE | TYPE INST | Q U | V I | RSN CD | SALE PRICE |
|---|---|---|---|---|---|---|
| 0914/2309 | 8/30/2000 | WD | Q | V | 01 | 330,000 |
| GRANTOR: JOHN E & H SLADE HOWE | | | | | | |
| GRANTEE: FIRST BAPTIST CHURC | | | | | | |
| 0749/0764 | 8/09/1991 | WD | Q | V | 01 | 190,909 |
| GRANTOR: MARY M GIBSON | | | | | | |
| GRANTEE: FIRST BAPTIST CHURC | | | | | | |

## BUILDING NOTES

## BUILDING DIMENSIONS

BAS= W116S41CAN= S8E84 N12 W18 S4W66$ E66 N4 E18 S44 W6 S17 UOP= W10 S17 E10 N10 E12N7 W12$ E48 UOP= S7 E12 S10 E10 N17 W22$ E12 N17 W6 N39 CAN= E24 N61 W5 S56 W19 S5$ N5 E19 N37 W9 UST= N13 W26S13E26$W26$PTR=E300BAS= W151S41 CAN= S8 E84 N12 W18 S4 W66$ E66 N4 E18 S44 W6 S17 E60 N17 W6 N44 E19 N37$ W300$ PTR=N115BAS= W85 S37 E85 N37$ S115$.

## EXTRA FEATURES

| LN | OB/XF CODE | DESCRIPTION | BLD | CAP | L | W | UNITS | UT | Adj R | ADJ UNIT PRICE | ORIG COND | YEAR ON | YEAR ACTUAL | Q | % COND | OB/XF MKT VALUE | NOTES |
|---|---|---|---|---|---|---|---|---|---|---|---|---|---|---|---|---|---|
| 1 | 0260 | PAVEMENT-A | 0 | 0 | 0 | 0 | 1.00 | UT | 0.00 | 0.00 | 100 | 0 | 0 | 3 | 100 | 3,000 | |
| 2 | 0120 | CLFENCE 4 | 0 | 0 | 0 | 0 | 1.00 | UT | 0.00 | 0.00 | 100 | 2016 | 2016 | 3 | 100 | 300 | |
| 3 | 0294 | SHED WOOD/ | 0 | 0 | 0 | 0 | 1.00 | UT | 0.00 | 0.00 | 100 | 2016 | 2016 | 3 | 100 | 1,000 | |

## LAND DESCRIPTION

TOTAL OB/XF 4,300

| LN | USE CODE | CLS | LAND USE DESCRIPTION | CAP | RD | LOC ZONE | FRONT | DEPTH | TOT LND UTS | UNIT TYPE | DT | DPTH FACT | % COND | TOT ADJ | UNIT PRICE | ADJ UNIT PRICE | LAND VALUE | OTHER ADJUSTMENTS AND NOTES | YEAR | DENSITY | DECL | FRZ | YR | CONSRV |
|---|---|---|---|---|---|---|---|---|---|---|---|---|---|---|---|---|---|---|---|---|---|---|---|---|
| 1 | 7100 | C | CHURCH | 0 | | *CG | 0.00 | 0.00 | 112,820.00 | SF | | 1.00 | 1.00 | 1.00 | 6.00 | 6.00 | 676,920 | | | | | | | |

REVIEW DATE 10/21/2016 BY DF Total Acres: 2.59 Total Land Value: 676,920 Market: 0 Agricultural: 0 Common: 676,920 PRINTED 11/06/2025 BY SYS

C DIV: ALL BLOCKS 23 & 24, EX TH
THE N 140 FT FOR COURTHOUSE ANNE
E DIV: BLOCKS 248 & 249. EX .23

**FIRST BAPTIST CHURCH OF LAKE CITY**
182 NE JUSTICE ST
LAKE CITY, FL 32055

**2026**

**00-00-00-12696-000**

## COLUMBIA COUNTY PROPERTY



## BUILDING CHARACTERISTICS

| ELEMENT | CD | CONSTRUCTION |
|---|---|---|
| Exterior Wall | 19 | COMMON BRK 100 |
| Roof Structur | 03 | GABLE/HIP 100 |
| Roof Cover | 03 | COMP SHNGL 100 |
| Interior Wall | 05 | DRYWALL 100 |
| Interior Floo | 14 | CARPET 90 |
| Interior Floo | 06 | VINYL ASB 10 |
| Ceiling | 02 | F.NOT SUS 100 |
| Air Condition | 03 | CENTRAL 100 |
| Heating Type | 04 | AIR DUCTED 100 |
| Fixtures | | 21 100 |
| Frame | 02 | WOOD FRAME 100 |
| Story Height | | 10 100 |
| RMS | | 5 100 |
| Stories | 1. | 1. 100 |
| Units | | 0 100 |
| Condition Adj | 03 | 03 100 |
| Quality | 07 | 07 |
| DOR CODE | 7100 | CHURCHES-EX |
| MAP NUM | | MKT AREA 06 |
| NEIGHBORHOOD/LOC | 850317.00 | 1.00/ |

| AREA TYPE | TOTAL GROSS AREA | PCT OF BASE | YEAR | TOT ADJ AREA | SUBAREA MARKET VALUE |
|---|---|---|---|---|---|
| BAS | 6,477 | 100 | | 6,477 | 254,352 |
| CAN | 4,847 | 30 | | 1,454 | 57,099 |
| KTG | 1,640 | 125 | | 2,050 | 80,504 |
| UUS | 2,596 | 40 | | 1,038 | 40,763 |
| TOTALS | 15,560 | | | 11,019 | 432,716 |

## MARKET ADJUSTMENTS

| TYPE | MDL | EFF. AREA | TOT ADJ PTS | EFF. BASE RATE | REPL. COST NEW | AYB | EYB | ECON | FNCT | | NORM | % COND |
|---|---|---|---|---|---|---|---|---|---|---|---|---|
| 9100 | 04 | 11,019 | 102.0062 | 78.54 | 865,432 | 1993 | 1993 | 0 | 0 | 0 | 50.00 | 50.00 |

2 CHURCH 0% - 0 Heated Area: 8117 HX Base Yr

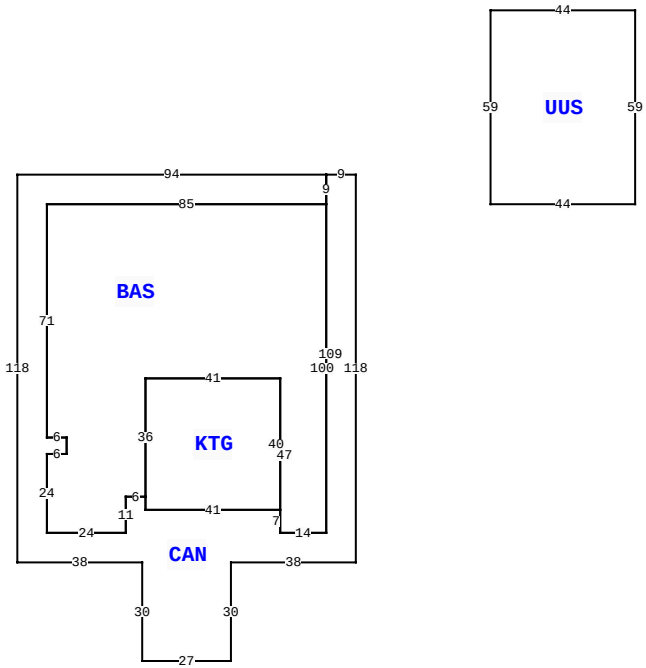


182 NE JUSTICE ST, LAKE CITY

| | | | |
|---|---|---|---|
| BLD DATE | | LGL DATE | |
| XF DATE | | LAND DATE | 04/09/2024 MLU |
| INC DATE | | AG DATE | |

## VALUATION SUMMARY

| | | |
|---|---|---|
| VALUATION BY | | STANDARD |
| Tax Group: 1 | Tax Dist: | |
| BUILDING MARKET VALUE | | 1,325,166 |
| TOTAL MARKET OB/XF VALUE | | 4,300 |
| TOTAL LAND VALUE - MARKET | | 676,920 |
| TOTAL MARKET VALUE | | 2,006,386 |
| SOH/AGL Deduction | | 0 |
| ASSESSED VALUE | | 2,006,386 |
| TOTAL EXEMPTION VALUE | 02 | 2,006,386 |
| BASE TAXABLE VALUE | | 0 |
| TOTAL JUST VALUE | | 2,006,386 |
| NCON VALUE | | 0 |
| INCOME VALUE | | |
| PREVIOUS YEAR MKT VALUE | | 2,028,022 |

| PERMIT NUM | DESCRIPTION | AMT | ISSUED |
|---|---|---|---|
| | | | |

## SALES DATA

| OFF RECORD Number | DATE | TYPE INST | Q U | V I | RSN CD | SALE PRICE |
|---|---|---|---|---|---|---|
| 0914/2309 | 8/30/2000 | WD | Q | V | 01 | 330,000 |
| GRANTOR: JOHN E & H SLADE HOWE | | | | | | |
| GRANTEE: FIRST BAPTIST CHURC | | | | | | |
| 0749/0764 | 8/09/1991 | WD | Q | V | 01 | 190,909 |
| GRANTOR: MARY M GIBSON | | | | | | |
| GRANTEE: FIRST BAPTIST CHURC | | | | | | |

## BUILDING NOTES

## BUILDING DIMENSIONS

BAS= W85 S71 E6 S5 W6 S24 E24N11 E6 KTG= N36 E41 S40 W41 N4$N36 E41 S47 E14 N100$ CAN= N9 W94 S118 E38 S30 E27 N30 E38 N118 W9 S109 W14 N7 W41 N4 W6 S11 W24 N24 E6 N5 W6N71 E85 $ PTR=E50 UUS= E44 N59 W44 S59$ W50$.

## EXTRA FEATURES

| LN | OB/XF CODE | DESCRIPTION | BLD | CAP | L | W | UNITS | UT | Adj R | ADJ UNIT PRICE | ORIG COND | YEAR ON | YEAR ACTUAL | Q | % COND | OB/XF MKT VALUE | NOTES |
|---|---|---|---|---|---|---|---|---|---|---|---|---|---|---|---|---|---|

## LAND DESCRIPTION

TOTAL OB/XF 0

| LN | USE CODE | CLS | LAND USE DESCRIPTION | CAP | RD | LOC ZONE | FRONT | DEPTH | TOT LND UTS | UNIT TYPE | DT | DPTH FACT | % COND | TOT ADJ | UNIT PRICE | ADJ UNIT PRICE | LAND VALUE | OTHER ADJUSTMENTS AND NOTES | YEAR | DENSITY | DECL | FRZ | YR | CONSRV |
|---|---|---|---|---|---|---|---|---|---|---|---|---|---|---|---|---|---|---|---|---|---|---|---|---|

REVIEW DATE 10/21/2016 BY DF Total Acres: 2.59 Total Land Value: 676,920 Market: 0 Agricultural: 0 Common: 676,920 PRINTED 11/06/2025 BY SYS

C DIV: ALL BLOCKS 23 & 24, EX TH
THE N 140 FT FOR COURTHOUSE ANNE
E DIV: BLOCKS 248 & 249. EX .23

**FIRST BAPTIST CHURCH OF LAKE CITY**
182 NE JUSTICE ST
LAKE CITY, FL 32055

**2026**

**00-00-00-12696-000**

## COLUMBIA COUNTY PROPERTY



## BUILDING CHARACTERISTICS

| ELEMENT | CD | CONSTRUCTION |
|---|---|---|
| Exterior Wall | 19 | COMMON BRK 100 |
| Roof Structur | 04 | WOOD TRUSS 100 |
| Roof Cover | 04 | BUILT-UP 100 |
| Interior Wall | 05 | DRYWALL 100 |
| Interior Floo | 14 | CARPET 70 |
| Interior Floo | 07 | CORK/VTILE 30 |
| Ceiling | 02 | F.NOT SUS 100 |
| Air Condition | 03 | CENTRAL 100 |
| Heating Type | 04 | AIR DUCTED 100 |
| Fixtures | | 8 100 |
| Frame | 03 | MASONRY 100 |
| Story Height | | 8 100 |
| RMS | | 12 100 |
| Stories | 1. | 1. 100 |
| Units | | 0 100 |
| Quality | 05 | 05 |
| DOR CODE | 7100 | CHURCHES-EX |
| MAP NUM | | MKT AREA 06 |
| NEIGHBORHOOD/LOC | 850317.00 | 1.00/ |

| AREA TYPE | TOTAL GROSS AREA | PCT OF BASE | YEAR | TOT ADJ AREA | SUBAREA MARKET VALUE |
|---|---|---|---|---|---|
| BAS | 2,944 | 100 | | 2,944 | 110,621 |
| CAN | 384 | 30 | | 115 | 4,321 |
| TOTALS | 3,328 | | | 3,059 | 114,942 |

## MARKET ADJUSTMENTS

| TYPE | MDL | EFF. AREA | TOT ADJ PTS | EFF. BASE RATE | REPL. COST NEW | AYB | EYB | ECON | FNCT | | NORM | % COND |
|---|---|---|---|---|---|---|---|---|---|---|---|---|
| 9100 | 04 | 3,059 | 97.5936 | 75.15 | 229,884 | 1943 | 1985 | 0 | 0 | 0 | 50.00 | 50.00 |

3 CHURCH 0% - 0 Heated Area: 2944 HX Base Yr

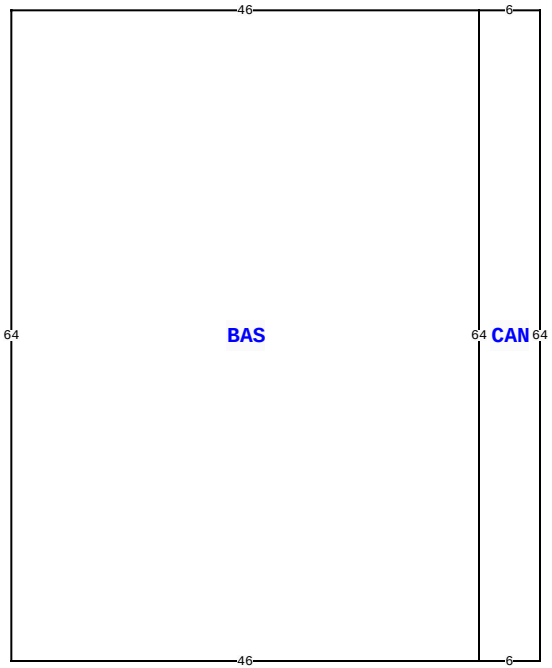


182 NE JUSTICE ST, LAKE CITY

| | | | |
|---|---|---|---|
| BLD DATE | | LGL DATE | |
| XF DATE | | LAND DATE | 04/09/2024 MLU |
| INC DATE | | AG DATE | |

## VALUATION SUMMARY

| | | |
|---|---|---|
| VALUATION BY | | STANDARD |
| Tax Group: 1 | Tax Dist: | |
| BUILDING MARKET VALUE | | 1,325,166 |
| TOTAL MARKET OB/XF VALUE | | 4,300 |
| TOTAL LAND VALUE - MARKET | | 676,920 |
| TOTAL MARKET VALUE | | 2,006,386 |
| SOH/AGL Deduction | | 0 |
| ASSESSED VALUE | | 2,006,386 |
| TOTAL EXEMPTION VALUE | 02 | 2,006,386 |
| BASE TAXABLE VALUE | | 0 |
| TOTAL JUST VALUE | | 2,006,386 |
| NCON VALUE | | 0 |
| INCOME VALUE | | |
| PREVIOUS YEAR MKT VALUE | | 2,028,022 |

| PERMIT NUM | DESCRIPTION | AMT | ISSUED |
|---|---|---|---|
| | | | |

## SALES DATA

| OFF RECORD Number | DATE | TYPE INST | Q / U | V / I | RSN CD | SALE PRICE |
|---|---|---|---|---|---|---|
| 0914/2309 | 8/30/2000 | WD | Q | V | 01 | 330,000 |
| GRANTOR: JOHN E & H SLADE HOWE | | | | | | |
| GRANTEE: FIRST BAPTIST CHURC | | | | | | |
| 0749/0764 | 8/09/1991 | WD | Q | V | 01 | 190,909 |
| GRANTOR: MARY M GIBSON | | | | | | |
| GRANTEE: FIRST BAPTIST CHURC | | | | | | |

## BUILDING NOTES

## BUILDING DIMENSIONS

BAS= S64 E46 CAN= E6 N64 W6 S64$ N64 W46$.

## EXTRA FEATURES

| L N | OB/XF CODE | DESCRIPTION | BLD | CAP | L | W | UNITS | UT | Adj R | ADJ UNIT PRICE | ORIG COND | YEAR ON | YEAR ACTUAL | Q | % COND | OB/XF MKT VALUE | NOTES |
|---|---|---|---|---|---|---|---|---|---|---|---|---|---|---|---|---|---|

## LAND DESCRIPTION

TOTAL OB/XF 0

| L N | USE CODE | CLS | LAND USE DESCRIPTION | CAP | R D | LOC ZONE | FRONT | DEPTH | TOT LND UTS | UNIT TYPE | D T | DPTH FACT | % COND | TOT ADJ | UNIT PRICE | ADJ UNIT PRICE | LAND VALUE | OTHER ADJUSTMENTS AND NOTES | YEAR | DENSITY | DECL | FRZ | YR | CONSRV |
|---|---|---|---|---|---|---|---|---|---|---|---|---|---|---|---|---|---|---|---|---|---|---|---|---|

REVIEW DATE 10/21/2016 BY DF Total Acres: 2.59 Total Land Value: 676,920 Market: 0 Agricultural: 0 Common: 676,920 PRINTED 11/06/2025 BY SYS