C DIV: BEG 84 FT S OF NE COR BLO
FT, W 105 FT, N 80 FT, E 105 FT
AC DESC IN WD 1527-90 & EX 0.002

ZBAX, LLC
156 N MARION AVE
LAKE CITY, FL 32055

2026

00-00-00-12686-000

COLUMBIA COUNTY PROPERTY

BUILDING CHARACTERISTICS

ELEMENT	CD	CONSTRUCTION
Exterior Wall	15	CONC BLOCK 50
Exterior Wall	19	COMMON BRK 50
Roof Structur	02	SHED 100
Roof Cover	04	BUILT-UP 100
Interior Wall	02	WALL BD/WD 100
Interior Floo	06	VINYL ASB 50
Interior Floo	14	CARPET 50
Air Condition	03	CENTRAL 100
Heating Type	04	AIR DUCTED 100
Fixtures		4 100
Frame	03	MASONRY 100
Story Height		8 100
RMS		2 100
Stories	2.	2. 100
Units		0 100
Condition Adj	01	01 100
Quality	05	05
DOR CODE	1100	STORES/1 STORY
MAP NUM		MKT AREA 06
NEIGHBORHOOD/LOC	850317.00	1.00/

AREA TYPE	TOTAL GROSS AREA	PCT OF BASE	YEAR	TOT ADJ AREA	SUBAREA MARKET VALUE
BAS	2,824	100		2,824	44,337
CAN	308	30		92	1,445
FST	1,268	50		634	9,954
FUS	3,564	100		3,564	55,955
TOTALS	7,964			7,114	111,690

MARKET ADJUSTMENTS

TYPE	MDL	EFF. AREA	TOT ADJ PTS	EFF. BASE RATE	REPL. COST NEW	AYB	EYB	ECON	FNCT		NORM	% COND
3500	04	7,114	49.8400	31.40	223,380	1900	1970	0	0	0	50.00	50.00

1 STORE RETL 0% - 2025 Heated Area: 6388 HX Base Yr

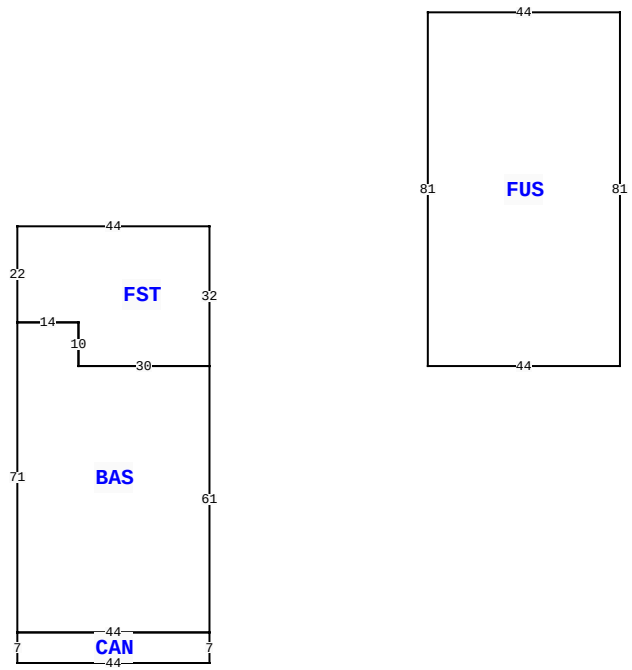

156 N MARION AVE, LAKE CITY

BLD DATE		LGL DATE	
XF DATE		LAND DATE	04/09/2024 MLU
INC DATE		AG DATE	

VALUATION SUMMARY

VALUATION BY	STANDARD
Tax Group: 1	Tax Dist:
BUILDING MARKET VALUE	111,690
TOTAL MARKET OB/XF VALUE	0
TOTAL LAND VALUE - MARKET	30,492
TOTAL MARKET VALUE	142,182
SOH/AGL Deduction	0
ASSESSED VALUE	142,182
TOTAL EXEMPTION VALUE	0
BASE TAXABLE VALUE	142,182
TOTAL JUST VALUE	142,182
NCON VALUE	0
INCOME VALUE	
PREVIOUS YEAR MKT VALUE	156,125

PERMIT NUM	DESCRIPTION	AMT	ISSUED
14-113	REMODEL	105	04/01/2014
1508	MAINT/ALTR	75	12/14/2009
29	REMODEL	50	02/08/2007

SALES DATA

OFF RECORD Number	DATE	TYPE INST	Q / U	V / I	RSN CD	SALE PRICE
1528/613	11/22/2024	WD	Q	I	01	190,000
GRANTOR: 156-168 MARION STREET						
GRANTEE: ZBAX, LLC						
1401/0993	10/31/2019	WD	U	I	11	100
GRANTOR: GEORGE R & JOAN WARD						
GRANTEE: 156-168 MARION STEE						

BUILDING NOTES

BUILDING DIMENSIONS

FUS=[ORIG=50,0] E44 N81 W44 S81 $
BAS=[ORIG=0,0] W30 N10 W14 S71 E44 N61 $
FST=[ORIG=0,0] N32 W44 S22 E14 S10 E30 $
CAN=[ORIG=-44,61] S7 E44 N7 W44 $
PTR=[ORIG=0,0] E50 W50 $
.

EXTRA FEATURES

L N	OB/XF CODE	DESCRIPTION	BLD	CAP	L	W	UNITS	UT	Adj R	ADJ UNIT PRICE	ORIG COND	YEAR ON	YEAR ACTUAL	Q	% COND	OB/XF MKT VALUE	NOTES

LAND DESCRIPTION

TOTAL OB/XF 0

L N	USE CODE	CLS	LAND USE DESCRIPTION	CAP	R D	LOC ZONE	FRONT	DEPTH	TOT LND UTS	UNIT TYPE	D T	DPTH FACT	% COND	TOT ADJ	UNIT PRICE	ADJ UNIT PRICE	LAND VALUE	OTHER ADJUSTMENTS AND NOTES	YEAR	DENSITY	DECL	FRZ	YR	CONSRV
1	1100	C	STORE 1FLR	0		*C-CBD	80.00	105.00	4,356.00	SF		1.00	1.00	1.00	7.00	7.00	30,492							

REVIEW DATE 12/31/2024 BY TP Total Acres: 0.10 Total Land Value: 30,492 Market: 0 Agricultural: 0 Common: 30,492 PRINTED 11/18/2025 BY SYS