W DIV: LOTS 1, 2, 3 & 4 BLOCK 14
PARK S/D.

CANADAY TY
310 SW LAKEVIEW AVE
LAKE CITY, FL 32025

2026

00-00-00-12599-000

COLUMBIA COUNTY PROPERTY

BUILDING CHARACTERISTICS

ELEMENT	CD	CONSTRUCTION
Exterior Wall	05	AVERAGE 100
Roof Structur	03	GABLE/HIP 100
Roof Cover	14	PREFIN MT 100
Interior Wall	04	PLYWOOD 100
Interior Floo	12	HARDWOOD 80
Interior Floo	15	HARDTILE 20
Air Condition	03	CENTRAL 100
Heating Type	04	AIR DUCTED 100
Bedrooms		3 100
Bathrooms		2 100
Frame	01	NONE 100
Stories	1.	1. 100
Architectual	05	CONV 100
Units		0 100
Condition Adj	03	03 100
Kitchen Adjus	02	02 100
Quality	05	05
DOR CODE	0100	SINGLE FAMILY
MAP NUM		MKT AREA 06
NEIGHBORHOOD/LOC	840317.00	1.00/

AREA TYPE	TOTAL GROSS AREA	PCT OF BASE	YEAR	TOT ADJ AREA	SUBAREA MARKET VALUE
BAS	888	100		888	77,033
BAS	918	100		918	79,635
FEP	208	80		166	14,400
FGR	660	55		363	31,490
FOP	30	30		9	781
UOP	90	20		18	1,561
UOP	192	20		38	3,296
TOTALS	2,986			2,400	208,198

MARKET ADJUSTMENTS

TYPE	MDL	EFF. AREA	TOT ADJ PTS	EFF. BASE RATE	REPL. COST NEW	AYB	EYB	ECON	FNCT		NORM	% COND
0100	01	2,400	119.1645	133.46	320,304	1950	1950	0	0	0	35.00	65.00

1 SINGLE FAM 100% - 2024 Heated Area: 1806 HX Base Yr 2024

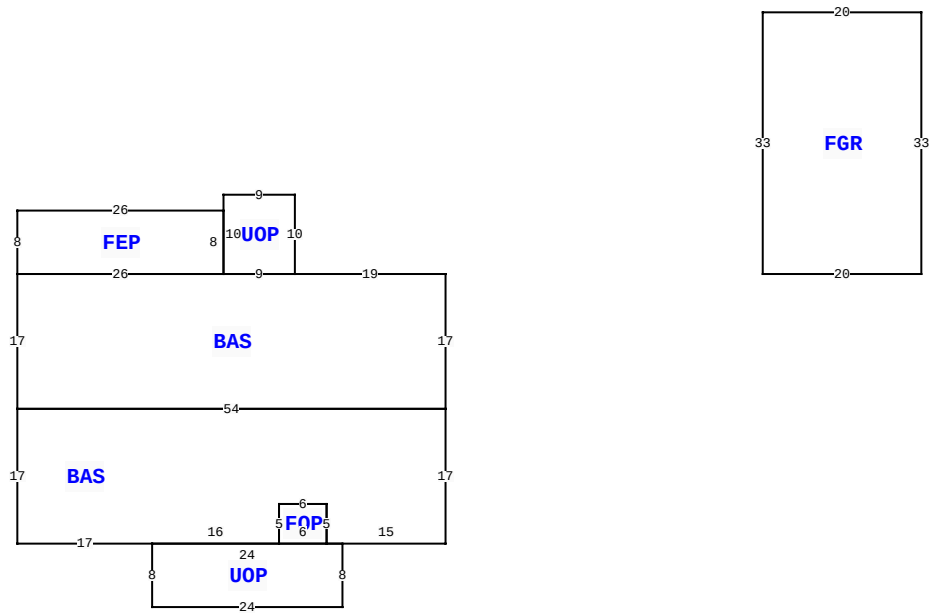

310 SW LAKEVIEW AVE, LAKE CITY

BLD DATE		LGL DATE	
XF DATE		LAND DATE	04/27/2022 MLU
INC DATE		AG DATE	

VALUATION SUMMARY

VALUATION BY		STANDARD
Tax Group: 1	Tax Dist:	
BUILDING MARKET VALUE		208,198
TOTAL MARKET OB/XF VALUE		2,250
TOTAL LAND VALUE - MARKET		23,750
TOTAL MARKET VALUE		234,198
SOH/AGL Deduction		0
ASSESSED VALUE		234,198
TOTAL EXEMPTION VALUE	HX HB VX	55,722
BASE TAXABLE VALUE		178,476
TOTAL JUST VALUE		234,198
NCON VALUE		0
INCOME VALUE		
PREVIOUS YEAR MKT VALUE		234,198

PERMIT NUM	DESCRIPTION	AMT	ISSUED

SALES DATA

OFF RECORD Number	DATE	TYPE INST	Q U /	V I /	RSN CD	SALE PRICE
1462/2099	3/25/2022	WD	Q	I	01	233,000
GRANTOR: THOMAS SADIE KAY						
GRANTEE: CANADAY TY						
1140/1186	12/31/2007	WD	Q	I		131,000
GRANTOR: EMILY PHILLIPS & LYND						
GRANTEE: SADIE KAY THOMAS						

BUILDING NOTES

BUILDING DIMENSIONS

BAS= W19 UOP= N10 W9 S10 E9$W9 FEP= N8 W26 S8 E26$ W26 S17
BAS= S17 E17 UOP= S8 E24 N8 W24$ E16 FOP= E6 N5 W6 S5$ N5 E6
S5 E15 N17W54$ E54 N17$ PTR=E40 FGR= E20 N33 W20 S33$ W40$.

EXTRA FEATURES

LN	OB/XF CODE	DESCRIPTION	BLD	CAP	L	W	UNITS	UT	Adj R	ADJ UNIT PRICE	ORIG COND	YEAR ON	YEAR ACTUAL	Q	% COND	OB/XF MKT VALUE	NOTES
1	0166	CONC,PAVMT	0	100	0	0	1.00	UT	0.00	0.00	100	0	0	3	100	150	
2	0260	PAVEMENT-A	0	100	0	0	1.00	UT	0.00	0.00	100	0	0	3	100	500	
3	0060	CARPORT F	0	100	16	21	1.00	UT	0.00	0.00	100	1993	1993	3	100	400	
4	0190	FPLC PF	0	100	0	0	1.00	UT	1,200.00	1,200.00	100	2008	2008	3	100	1,200	

LAND DESCRIPTION

TOTAL OB/XF 2,250

LN	USE CODE	CLS	LAND USE DESCRIPTION	CAP	RD	LOC ZONE	FRONT	DEPTH	TOT LND UTS	UNIT TYPE	DT	DPTH FACT	% COND	TOT ADJ	UNIT PRICE	ADJ UNIT PRICE	LAND VALUE	OTHER ADJUSTMENTS AND NOTES	YEAR	DENSITY	DECL	FRZ	YR	CONSRV
1	0100	C	SFR	100		*RSF-2	200.00	125.00	25,000.00	SF		1.00	1.00	1.00	0.95	0.95	23,750							

REVIEW DATE 09/15/2022 BY CP Total Acres: 0.57 Total Land Value: 23,750 Market: 0 Agricultural: 0 Common: 23,750 PRINTED 11/17/2025 BY SYS