W DIV: LOT 24 BLK 4 MCFARLANE PA

783-2155, DC 840-2443, QC 871-55

O'NEAL JONATHAN
941 SW SPRING LANE
LAKE CITY, FL 32055

2026

00-00-00-12542-000

COLUMBIA COUNTY PROPERTY

BUILDING CHARACTERISTICS

ELEMENT	CD	CONSTRUCTION
Exterior Wall	31	VINYL SID 100
Roof Structur	03	GABLE/HIP 100
Roof Cover	12	MODULAR MT 100
Interior Wall	05	DRYWALL 100
Interior Floo	14	CARPET 90
Interior Floo	06	VINYL ASB 10
Air Condition	03	CENTRAL 100
Heating Type	04	AIR DUCTED 100
Bedrooms		3 100
Bathrooms		1.5 100
Frame	01	NONE 100
Stories	1.	1. 100
Architectual	05	CONV 100
Units		0 100
Condition Adj	03	03 100
Kitchen Adjus	01	01 100
Quality	03	03
DOR CODE	0100	SINGLE FAMILY
MAP NUM		MKT AREA 06
NEIGHBORHOOD/LOC	840317.00	1.00/

AREA TYPE	TOTAL GROSS AREA	PCT OF BASE	YEAR	TOT ADJ AREA	SUBAREA MARKET VALUE
BAS	30	100		30	2,111
BAS	210	100		210	14,779
BAS	264	100		264	18,579
BAS	1,008	100		1,008	70,938
USP	96	35		34	2,393
UST	144	45		65	4,575
TOTALS	1,752			1,611	113,375

MARKET ADJUSTMENTS

TYPE	MDL	EFF. AREA	TOT ADJ PTS	EFF. BASE RATE	REPL. COST NEW	AYB	EYB	ECON	FNCT		NORM	% COND
0100	01	1,611	96.6735	108.27	174,423	1940	1940	0	0	0	35.00	65.00

1 SINGLE FAM 100% - 2005 Heated Area: 1512 HX Base Yr 2005

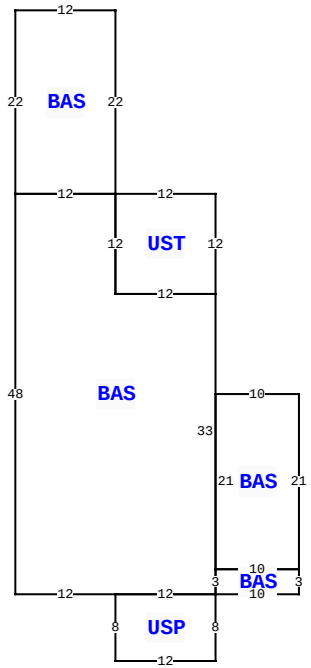

941 SW SPRING LN, LAKE CITY

BLD DATE		LGL DATE	
XF DATE		LAND DATE	04/27/2022 MLU
INC DATE		AG DATE	

VALUATION SUMMARY

VALUATION BY		STANDARD
Tax Group: 1	Tax Dist:	
BUILDING MARKET VALUE		113,375
TOTAL MARKET OB/XF VALUE		2,550
TOTAL LAND VALUE - MARKET		5,938
TOTAL MARKET VALUE		121,863
SOH/AGL Deduction		56,936
ASSESSED VALUE		64,927
TOTAL EXEMPTION VALUE	HX HB	39,927
BASE TAXABLE VALUE		25,000
TOTAL JUST VALUE		121,863
NCON VALUE		0
INCOME VALUE		
PREVIOUS YEAR MKT VALUE		121,863

PERMIT NUM	DESCRIPTION	AMT	ISSUED

SALES DATA

OFF RECORD Number	DATE	TYPE INST	Q U /	V I /	RSN CD	SALE PRICE
1312/2140	4/04/2016	QC	U	I	11	100
GRANTOR: ALICE Y GORDON						
GRANTEE: JONATHAN O'NEAL						
0871/0055	3/03/1998	QC	Q	I	01	20,000
GRANTOR: A PUTTERE						
GRANTEE: D HUNT						

BUILDING NOTES

BUILDING DIMENSIONS

BAS= W12 S48 E12 USP= S8 E12N8 W12$ E12 BAS= E10 N3 W10 S3$ N3 BAS= E10 N21 W10 S21$ N33 UST= N12 W12 S12 E12$ W12 N12$ BAS= N22 W12 S22 E12$.

EXTRA FEATURES

LN	OB/XF CODE	DESCRIPTION	BLD	CAP	L	W	UNITS	UT	Adj R	ADJ UNIT PRICE	ORIG COND	YEAR ON	YEAR ACTUAL	Q	% COND	OB/XF MKT VALUE	NOTES
1	0120	CLFENCE 4	0	100	0	0	1.00	UT	0.00	0.00	100	1993	1993	3	100	300	
2	0166	CONC,PAVMT	0	100	12	50	600.00	UT	2.00	2.00	100	2011	2011	3	100	1,200	
3	0296	SHED METAL	0	100	0	0	1.00	UT	0.00	0.00	100	2016	2016	3	100	800	
4	0070	CARPORT UF	0	100	0	0	1.00	UT	0.00	0.00	100	2016	2016	3	100	200	
5	0169	FENCE/WOOD	0	100	0	0	1.00	UT	0.00	0.00	100	2016	2016	3	100	50	

LAND DESCRIPTION

TOTAL OB/XF 2,550

LN	USE CODE	CLS	LAND USE DESCRIPTION	CAP	RD	LOC ZONE	FRONT	DEPTH	TOT LND UTS	UNIT TYPE	DT	DPTH FACT	% COND	TOT ADJ	UNIT PRICE	ADJ UNIT PRICE	LAND VALUE	OTHER ADJUSTMENTS AND NOTES	YEAR	DENSITY	DECL	FRZ	YR	CONSRV
1	0100	C	SFR	100		*RSF	-250.00	125.00	6,250.00	SF		1.00	1.00	1.00	0.95	0.95	5,938							

REVIEW DATE 08/30/2016 BY DF Total Acres: 0.14 Total Land Value: 5,938 Market: 0 Agricultural: 0 Common: 5,938 PRINTED 11/18/2025 BY SYS