W DIV: LOTS 1 & 2 BLOCK 3 MCFARL
DC 1082-1379, WD 1082-1380, QC 1

RING TIMOTHY/RING JANICE M
802 SW LAUREL LN
LAKE CITY, FL 32025

2025

00-00-00-12513-000

COLUMBIA COUNTY PROPERTY

BUILDING CHARACTERISTICS

ELEMENT	CD	CONSTRUCTION
Exterior Wall	16	WD FR STUC 100
Roof Structur	01	FLAT 100
Roof Cover	04	BUILT-UP 100
Interior Wall	04	PLYWOOD 100
Interior Floo	14	CARPET 90
Interior Floo	11	CLAY TILE 10
Air Condition	03	CENTRAL 100
Heating Type	04	AIR DUCTED 100
Bedrooms		4 100
Bathrooms		1.5 100
Frame	01	NONE 100
Stories	1.	1. 100
Architectual	05	CONV 100
Units		0 100
Condition Adj	03	03 100
Kitchen Adjus	01	01 100
Quality	05	05
DOR CODE	0100	SINGLE FAMILY
MAP NUM		MKT AREA 06
NEIGHBORHOOD/LOC	840317.00	1.00/

AREA TYPE	TOTAL GROSS AREA	PCT OF BASE	YEAR	TOT ADJ AREA	SUBAREA MARKET VALUE
BAS	2,129	100		2,129	154,175
FCP	528	25		132	9,559
FSP	172	40		69	4,997
UOP	42	20		8	579
UOP	124	20		25	1,810
UOP	144	20		29	2,100
TOTALS	3,139			2,392	173,220

MARKET ADJUSTMENTS

TYPE	MDL	EFF. AREA	TOT ADJ PTS	EFF. BASE RATE	REPL. COST NEW	AYB	EYB	ECON	FNCT		NORM	% COND
0100	01	2,392	103.1580	111.41	266,493	1915	1915	0	0	0	35.00	65.00

1 SINGLE FAM – 100% - 2019 Heated Area: 2129 HX Base Yr 2019

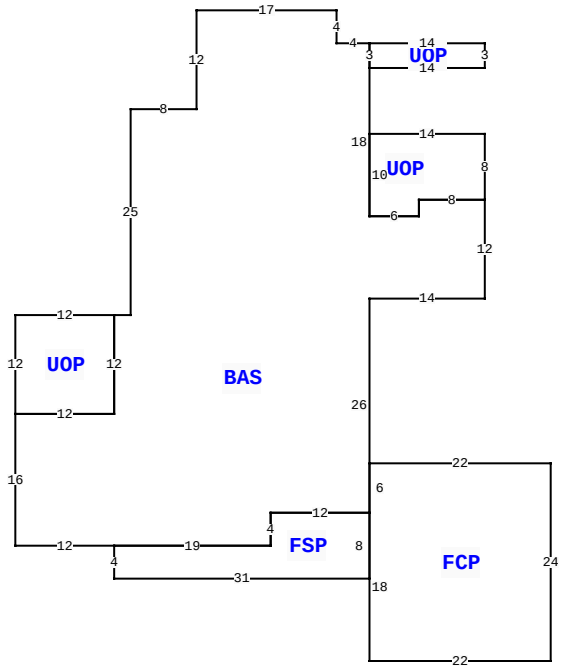

802 SW LAUREL LN, LAKE CITY

BLD DATE		LGL DATE	
XF DATE		LAND DATE	04/27/2022 MLU
INC DATE		AG DATE	

VALUATION SUMMARY

VALUATION BY		STANDARD
Tax Group: 1	Tax Dist:	
BUILDING MARKET VALUE		173,220
TOTAL MARKET OB/XF VALUE		2,496
TOTAL LAND VALUE - MARKET		11,546
TOTAL MARKET VALUE		187,262
SOH/AGL Deduction		63,348
ASSESSED VALUE		123,914
TOTAL EXEMPTION VALUE	HX HB	50,722
BASE TAXABLE VALUE		73,192
TOTAL JUST VALUE		187,262
NCON VALUE		0
INCOME VALUE		
PREVIOUS YEAR MKT VALUE		182,458

PERMIT NUM	DESCRIPTION	AMT	ISSUED

SALES DATA

OFF RECORD Number	DATE	TYPE INST	Q / U	V / I	RSN CD	SALE PRICE
1373/0926	11/26/2018	QC	U	I	11	100
GRANTOR: ROBERT J MOON TRUSTEE						
GRANTEE: LLOYD E & SANDRA H						
1373/0640	11/19/2018	WD	Q	I	01	104,000
GRANTOR: ROBERT J MOON TRUSTEE						
GRANTEE: TIMOTHY S & JANICE						

BUILDING NOTES

BUILDING DIMENSIONS

BAS= W17 S12 W8 S25 W2 UOP= W12 S12 E12 N12$ S12 W12 S16 E12 FSP= S4 E31 N8 W12 S4 W19$ E19 N4 E12 FCP= S18 E22 N24 W22 S6$ N26 E14 N12 UOP= N8 W14 S10 E6 N2 E8$ W8 S2 W6 N18 UOP= E14 N3 W14 S3$ N3 W4 N4$.

EXTRA FEATURES

LN	OB/XF CODE	DESCRIPTION	BLD	CAP	L	W	UNITS	UT	Adj R	ADJ UNIT PRICE	ORIG COND	YEAR ON	YEAR ACTUAL	Q	% COND	OB/XF MKT VALUE	NOTES
1	0200	GARAGE F	0	100	20	20	1.00	UT	0.00	0.00	100	1993	1993	3	100	1,500	
2	0166	CONC,PAVMT	0	100	22	32	794.00	UT	1.50	1.50	50	1993	1993	3	50	596	
3	0120	CLFENCE 4	0	100	0	0	1.00	UT	0.00	0.00	100	2011	2011	3	100	200	
4	0169	FENCE/WOOD	0	100	0	0	1.00	UT	0.00	0.00	100	2011	2011	3	100	200	

LAND DESCRIPTION

TOTAL OB/XF 2,496

LN	USE CODE	CLS	LAND USE DESCRIPTION	CAP	RD	LOC ZONE	FRONT	DEPTH	TOT LND UTS	UNIT TYPE	DT	DPTH FACT	% COND	TOT ADJ	UNIT PRICE	ADJ UNIT PRICE	LAND VALUE	OTHER ADJUSTMENTS AND NOTES	YEAR	DENSITY	DECL	FRZ	YR	CONSRV
1	0100	C	SFR	100		*RSF-1	100.00	125.00	13,503.60	SF		1.00	1.00	0.90	0.95	0.86	11,546							

REVIEW DATE 08/31/2016 BY DF Total Acres: 0.31 Total Land Value: 11,546 Market: 0 Agricultural: 0 Common: 11,546 PRINTED 05/06/2025 BY SYS