W DIV: LOTS 14 & 15 BLOCK 2
PINEDALE S/D.

PARKVIEW BAPTIST CHURCH, INC
268 NW LAKE JEFFREY RD
LAKE CITY, FL 32055

2026

00-00-00-12407-000

COLUMBIA COUNTY PROPERTY

BUILDING CHARACTERISTICS

ELEMENT	CD	CONSTRUCTION
Exterior Wall	19	COMMON BRK 100
Roof Structur	03	GABLE/HIP 100
Roof Cover	03	COMP SHNGL 100
Interior Wall	05	DRYWALL 100
Interior Floo	14	CARPET 90
Interior Floo	06	VINYL ASB 10
Air Condition	03	CENTRAL 100
Heating Type	04	AIR DUCTED 100
Bedrooms		3 100
Bathrooms		1.5 100
Frame	01	NONE 100
Stories	1.5	1.5 100
Architectual	05	CONV 100
Units		0 100
Condition Adj	03	03 100
Kitchen Adjus	01	01 100
Quality	04	04
DOR CODE	0100	SINGLE FAMILY
MAP NUM		MKT AREA 06
NEIGHBORHOOD/LOC	840317.00	1.00/

AREA TYPE	TOTAL GROSS AREA	PCT OF BASE	YEAR	TOT ADJ AREA	SUBAREA MARKET VALUE
BAS	1,036	100		1,036	82,094
FGR	552	55		304	24,090
FOP	54	30		16	1,268
FOP	81	30		24	1,902
FUS	672	100		672	53,251
TOTALS	2,395			2,052	162,603

MARKET ADJUSTMENTS

TYPE	MDL	EFF. AREA	TOT ADJ PTS	EFF. BASE RATE	REPL. COST NEW	AYB	EYB	ECON	FNCT		NORM	% COND
0100	01	2,052	108.8522	121.91	250,159	1938	1938	0	0	0	35.00	65.00

1 SINGLE FAM 0% - 0 Heated Area: 1708 HX Base Yr

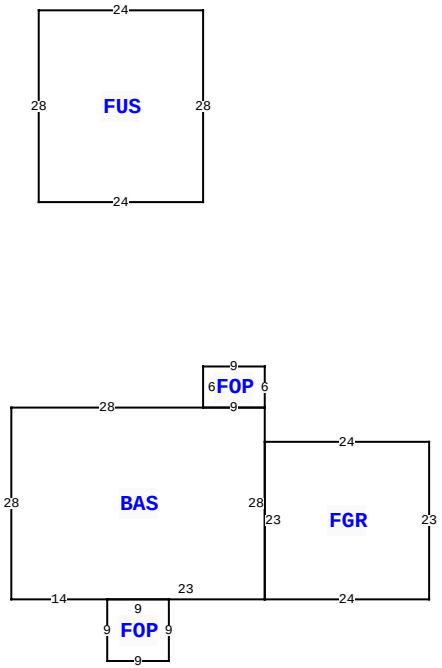

740 NW MADISON ST, LAKE CITY

BLD DATE		LGL DATE	
XF DATE		LAND DATE	04/27/2022 MLU
INC DATE		AG DATE	

VALUATION SUMMARY

VALUATION BY		STANDARD
Tax Group: 1	Tax Dist:	
BUILDING MARKET VALUE		162,603
TOTAL MARKET OB/XF VALUE		850
TOTAL LAND VALUE - MARKET		12,198
TOTAL MARKET VALUE		175,651
SOH/AGL Deduction		0
ASSESSED VALUE		175,651
TOTAL EXEMPTION VALUE	02	175,651
BASE TAXABLE VALUE		0
TOTAL JUST VALUE		175,651
NCON VALUE		0
INCOME VALUE		
PREVIOUS YEAR MKT VALUE		175,651

PERMIT NUM	DESCRIPTION	AMT	ISSUED

SALES DATA

OFF RECORD Number	DATE	TYPE INST	Q U	V I	RSN CD	SALE PRICE
1330/0388	1/31/2017	WD	U	I	17	100,000

GRANTOR: APRIL WILLIAMS & ROBE
GRANTEE: PARKVIEW BAPTIST CH

BUILDING NOTES

BUILDING DIMENSIONS

BAS= W28 S28 E14 FOP= S9 E9 N9 W9$ E23 FGR= E24 N23 W24 S23$ N28 FOP= N6 W9 S6 E9$ W9$ PTR=N30 FUS= N28 W24 S28 E24$ S30$.

EXTRA FEATURES

LN	OB/XF CODE	DESCRIPTION	BLD	CAP	L	W	UNITS	UT	Adj R	ADJ UNIT PRICE	ORIG COND	YEAR ON	YEAR ACTUAL	Q	% COND	OB/XF MKT VALUE	NOTES
1	0166	CONC,PAVMT	0	0	0	0	1.00	UT	0.00	0.00	100	0	0	3	100	200	
2	0294	SHED WOOD/	0	0	10	10	1.00	UT	0.00	0.00	100	0	0	3	100	150	
3	0294	SHED WOOD/	0	0	12	19	1.00	UT	0.00	0.00	100	0	0	3	100	200	
4	0130	CLFENCE 5	0	0	0	0	1.00	UT	0.00	0.00	100	1985	1985	3	100	300	

LAND DESCRIPTION

TOTAL OB/XF 850

LN	USE CODE	CLS	LAND USE DESCRIPTION	CAP	RD	LOC ZONE	FRONT	DEPTH	TOT LND UTS	UNIT TYPE	DT	DPTH FACT	% COND	TOT ADJ	UNIT PRICE	ADJ UNIT PRICE	LAND VALUE	OTHER ADJUSTMENTS AND NOTES	YEAR	DENSITY	DECL	FRZ	YR	CONSRV
1	0100	C	SFR	0		*RSF-3	120.00	107.00	12,840.00	SF		1.00	1.00	1.00	0.95	0.95	12,198							

REVIEW DATE 08/25/2016 BY DF Total Acres: 0.29 Total Land Value: 12,198 Market: 0 Agricultural: 0 Common: 12,198 PRINTED 11/17/2025 BY SYS