W DIV: BEGIN NE COR, RUN S
225 FT, W 68.03 FT, N 224.03
FT, E ALONG S BOUNDARY DUVAL

ROBINSON BRUCE W/ROBINSON MARY N
P O BOX 1178
LAKE CITY, FL 32056-1029

2026

00-00-00-12376-000

COLUMBIA COUNTY PROPERTY

BUILDING CHARACTERISTICS

ELEMENT	CD	CONSTRUCTION
Exterior Wall	19	COMMON BRK 100
Roof Structur	03	GABLE/HIP 100
Roof Cover	03	COMP SHNGL 100
Interior Wall	05	DRYWALL 100
Interior Floo	14	CARPET 100
Air Condition	03	CENTRAL 100
Heating Type	04	AIR DUCTED 100
Bedrooms		3 100
Bathrooms		2 100
Frame	01	NONE 100
Stories	1.5	1.5 100
Architectual	05	CONV 100
Units		0 100
Condition Adj	03	03 100
Kitchen Adjus	01	01 100
Quality	04	04
DOR CODE	1700	OFFICE BLD 1STY
MAP NUM		MKT AREA 06
NEIGHBORHOOD/LOC	840317.00	1.00/

AREA TYPE	TOTAL GROSS AREA	PCT OF BASE	YEAR	TOT ADJ AREA	SUBAREA MARKET VALUE
BAS	1,676	100		1,676	133,408
FCP	216	25		54	4,298
FEP	176	80		141	11,224
FOP	234	30		70	5,572
FUS	448	100		448	35,660
TOTALS	2,750			2,389	190,162

MARKET ADJUSTMENTS

TYPE	MDL	EFF. AREA	TOT ADJ PTS	EFF. BASE RATE	REPL. COST NEW	AYB	EYB	ECON	FNCT		NORM	% COND
0100	01	2,389	109.3360	122.46	292,557	1930	1975	0	0	0	35.00	65.00

1 SINGLE FAM 0% - 0 Heated Area: 2124 HX Base Yr

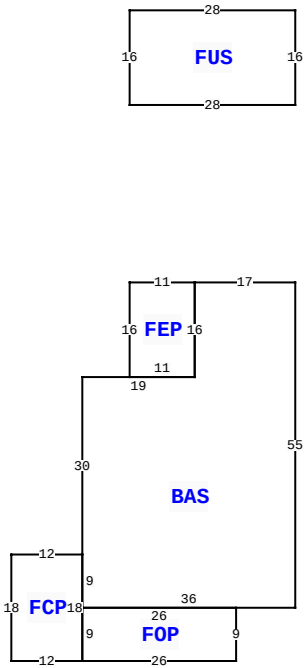

582 W DUVAL ST, LAKE CITY

BLD DATE		LGL DATE	
XF DATE		LAND DATE	04/09/2024 MLU
INC DATE		AG DATE	

VALUATION SUMMARY

VALUATION BY	STANDARD
Tax Group: 1	Tax Dist:
BUILDING MARKET VALUE	190,162
TOTAL MARKET OB/XF VALUE	4,450
TOTAL LAND VALUE - MARKET	106,026
TOTAL MARKET VALUE	300,638
SOH/AGL Deduction	0
ASSESSED VALUE	300,638
TOTAL EXEMPTION VALUE	0
BASE TAXABLE VALUE	300,638
TOTAL JUST VALUE	300,638
NCON VALUE	0
INCOME VALUE	
PREVIOUS YEAR MKT VALUE	300,638

PERMIT NUM	DESCRIPTION	AMT	ISSUED
439	ADDN COMM	75	08/28/2012

SALES DATA

OFF RECORD Number	DATE	TYPE INST	Q U /	V I /	RSN CD	SALE PRICE
1230/1072	2/21/2012	QC	U	I	11	100
GRANTOR: JOHN & JANET CREEL						
GRANTEE: BRUCE W & MARY ROBI						
1033/2294	12/17/2004	WD	Q	I		216,500
GRANTOR: W R OGDEN JR & JEAN O						
GRANTEE: BRUCE W & MARY ROBI						

BUILDING NOTES

BUILDING DIMENSIONS

BAS= W17 FEP= W11 S16 E11 N16$ S16 W19 S30 FCP= W12 S18 E12 N18$ S9 FOP= S9 E26 N9 W26$ E36 N55$ PTR=N30 FUS= N16 W28 S16 E28$ S30$.

EXTRA FEATURES

LN	OB/XF CODE	DESCRIPTION	BLD	CAP	L	W	UNITS	UT	Adj R	ADJ UNIT PRICE	ORIG COND	YEAR ON	YEAR ACTUAL	Q	% COND	OB/XF MKT VALUE	NOTES
1	0166	CONC,PAVMT	0	0	0	0	1.00	UT	0.00	0.00	100	1993	1993	3	100	200	
2	0166	CONC,PAVMT	0	0	0	0	1,700.00	UT	2.50	2.50	100	2008	2008	3	100	4,250	

LAND DESCRIPTION

TOTAL OB/XF 4,450

LN	USE CODE	CLS	LAND USE DESCRIPTION	CAP	RD	LOC ZONE	FRONT	DEPTH	TOT LND UTS	UNIT TYPE	DT	DPTH FACT	% COND	TOT ADJ	UNIT PRICE	ADJ UNIT PRICE	LAND VALUE	OTHER ADJUSTMENTS AND NOTES	YEAR	DENSITY	DECL	FRZ	YR	CONSRV
1	1700	C	1STORY OFF	0		*CG	89.00	198.00	17,671.00	SF		1.00	1.00	1.00	6.00	6.00	106,026							

REVIEW DATE 09/06/2016 BY DF Total Acres: 0.41 Total Land Value: 106,026 Market: 0 Agricultural: 0 Common: 106,026 PRINTED 11/07/2025 BY SYS