W DIV: LOTS 1 & 12 BLOCK 309.

597-712, LE 648-533, DC 842-1314

DOWNING ANN H/LOBB EVELYN D
5624 MILL TRACE DR
DUNWOODY, GA 30338

2026

00-00-00-12236-000

BUILDING CHARACTERISTICS

ELEMENT	CD	CONSTRUCTION
Exterior Wall	31	VINYL SID 100
Roof Structur	03	GABLE/HIP 100
Roof Cover	03	COMP SHNGL 100
Interior Wall	02	WALL BD/WD 100
Interior Floo	12	HARDWOOD 100
Air Condition	03	CENTRAL 100
Heating Type	02	CONVECTION 100
Bedrooms		3 100
Bathrooms		1 100
Frame	01	NONE 100
Stories	1.	1. 100
Architectual	05	CONV 100
Units		0 100
Condition Adj	03	03 100
Kitchen Adjus	01	01 100
Quality	05	05
DOR CODE	0100	SINGLE FAMILY
MAP NUM		MKT AREA 06
NEIGHBORHOOD/LOC	840317.00	1.00/

AREA TYPE	TOTAL GROSS AREA	PCT OF BASE	YEAR	TOT ADJ AREA	SUBAREA MARKET VALUE
BAS	1,232	100		1,232	84,308
FCP	608	25		152	10,402
UGR	400	45		180	12,318
TOTALS	2,240			1,564	107,028

MARKET ADJUSTMENTS

TYPE	MDL	EFF. AREA	TOT ADJ PTS	EFF. BASE RATE	REPL. COST NEW	AYB	EYB	ECON	FNCT		NORM	% COND
0100	01	1,564	94.0000	105.28	164,658	1940	1955	0	0	0	35.00	65.00

1 SINGLE FAM 0% - 2021 Heated Area: 1232 HX Base Yr

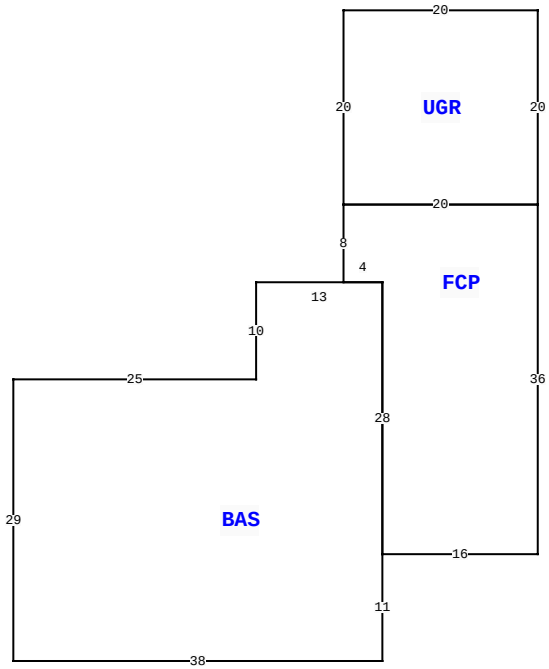

282 NW HILLSBORO ST, LAKE CITY

BLD DATE		LGL DATE	
XF DATE		LAND DATE	04/27/2022 MLU
INC DATE		AG DATE	

COLUMBIA COUNTY PROPERTY

PAGE 1 of 1 1

VALUATION SUMMARY

VALUATION BY	STANDARD
Tax Group: 1	Tax Dist:
BUILDING MARKET VALUE	107,028
TOTAL MARKET OB/XF VALUE	200
TOTAL LAND VALUE - MARKET	13,585
TOTAL MARKET VALUE	120,813
SOH/AGL Deduction	0
ASSESSED VALUE	120,813
TOTAL EXEMPTION VALUE	0
BASE TAXABLE VALUE	120,813
TOTAL JUST VALUE	120,813
NCON VALUE	0
INCOME VALUE	
PREVIOUS YEAR MKT VALUE	120,813

PERMIT NUM	DESCRIPTION	AMT	ISSUED

SALES DATA

OFF RECORD Number	DATE	TYPE INST	Q U /	V I /	RSN CD	SALE PRICE
1419/0679	9/10/2020	WD	U	I	16	100
GRANTOR: EVELYN D LOBB						
GRANTEE: EVELYN D LOBB AS TR						
1299/2027	8/17/2015	PB	U	I	18	100
GRANTOR: CLERK OF COURT (HOWAR						
GRANTEE: ANN H DOWNING (UND						

BUILDING NOTES

BUILDING DIMENSIONS

BAS= W13 S10 W25 S29 E38 N11 FCP= E16 N36 UGR= N20 W20 S20 E20$W20 S8 E4 S28$ N28$.

EXTRA FEATURES

LN	OB/XF CODE	DESCRIPTION	BLD	CAP	L	W	UNITS	UT	Adj R	ADJ UNIT PRICE	ORIG COND	YEAR ON	YEAR ACTUAL	Q	% COND	OB/XF MKT VALUE	NOTES
1	0166	CONC,PAVMT	0	0	0	0	1.00	UT	0.00	0.00	100	2003	2003	3	100	200	

LAND DESCRIPTION

TOTAL OB/XF 200

LN	USE CODE	CLS	LAND USE DESCRIPTION	CAP	RD	LOC ZONE	FRONT	DEPTH	TOT LND UTS	UNIT TYPE	DT	DPTH FACT	% COND	TOT ADJ	UNIT PRICE	ADJ UNIT PRICE	LAND VALUE	OTHER ADJUSTMENTS AND NOTES	YEAR	DENSITY	DECL	FRZ	YR	CONSRV
1	0100	C	SFR	0			0.00	0.00	7,000.00	SF		1.00	1.00	1.00	0.95	0.95	6,650							
2	0100	C	SFR	0			0.00	0.00	7,300.00	SF		1.00	1.00	1.00	0.95	0.95	6,935							

REVIEW DATE 11/01/2016 BY DF Total Acres: 0.33 Total Land Value: 13,585 Market: 0 Agricultural: 0 Common: 13,585 PRINTED 11/18/2025 BY SYS