N DIV: LOT 6 BLOCK 1 COLUMBIA PA
WD 1146-1515, TR 1408-1462, CD 1

MCBRIDE ISAAC/MCBRIDE AMBER
373 NW HILLSBORO ST
LAKE CITY, FL 32055

2026

00-00-00-12214-000

COLUMBIA COUNTY PROPERTY

BUILDING CHARACTERISTICS

ELEMENT	CD	CONSTRUCTION
Exterior Wall	19	COMMON BRK 100
Roof Structur	03	GABLE/HIP 100
Roof Cover	12	MODULAR MT 100
Interior Wall	05	DRYWALL 100
Interior Floo	14	CARPET 90
Interior Floo	08	SHT VINYL 10
Air Condition	03	CENTRAL 100
Heating Type	04	AIR DUCTED 100
Bedrooms		3 100
Bathrooms		3.5 100
Frame	01	NONE 100
Stories	1.	1. 100
Architectual	05	CONV 100
Units		0 100
Condition Adj	02	02 100
Kitchen Adjus	01	01 100
Quality	05	05
DOR CODE	0100	SINGLE FAMILY
MAP NUM		MKT AREA 06
NEIGHBORHOOD/LOC	830317.00	1.00/

AREA TYPE	TOTAL GROSS AREA	PCT OF BASE	YEAR	TOT ADJ AREA	SUBAREA MARKET VALUE
BAS	2,454	100		2,454	184,920
FOP	24	30		7	528
FOP	35	30		10	753
UCP	414	20		83	6,254
TOTALS	2,927			2,554	192,455

MARKET ADJUSTMENTS

TYPE	MDL	EFF. AREA	TOT ADJ PTS	EFF. BASE RATE	REPL. COST NEW	AYB	EYB	ECON	FNCT		NORM	% COND
0100	01	2,554	103.5072	115.93	296,085	1940	1940	0	0	0	35.00	65.00

1 SINGLE FAM 100% - 2022 Heated Area: 2454 HX Base Yr 2022

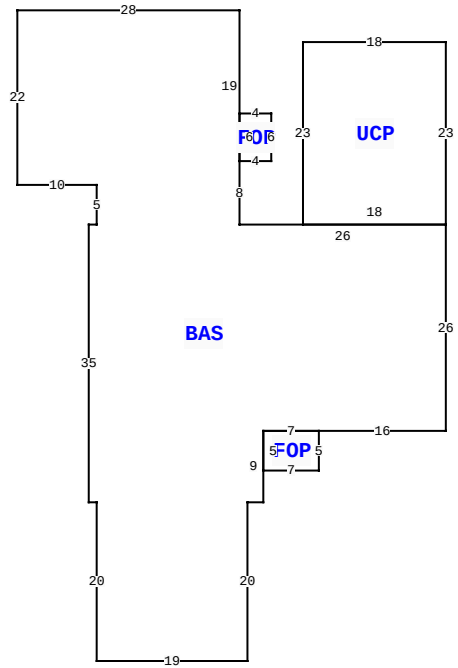

373 NW HILLSBORO ST, LAKE CITY

BLD DATE		LGL DATE	
XF DATE		LAND DATE	04/27/2022 MLU
INC DATE		AG DATE	

VALUATION SUMMARY

VALUATION BY		STANDARD
Tax Group: 1	Tax Dist:	
BUILDING MARKET VALUE		192,455
TOTAL MARKET OB/XF VALUE		1,700
TOTAL LAND VALUE - MARKET		11,115
TOTAL MARKET VALUE		205,270
SOH/AGL Deduction		45,727
ASSESSED VALUE		159,543
TOTAL EXEMPTION VALUE	HX HB	50,722
BASE TAXABLE VALUE		108,821
TOTAL JUST VALUE		205,270
NCON VALUE		0
INCOME VALUE		
PREVIOUS YEAR MKT VALUE		205,270

PERMIT NUM	DESCRIPTION	AMT	ISSUED

SALES DATA

OFF RECORD Number	DATE	TYPE INST	Q U /	V I /	RSN CD	SALE PRICE
1431/420	1/28/2021	WD	Q	I	01	165,000
GRANTOR: MURRAY CHARLES						
GRANTEE: MCBRIDE ISAAC						
1431/419	1/27/2021	WD	U	I	11	100
GRANTOR: BROWN DONALD E						
GRANTEE: MURRAY CHARLES						

BUILDING NOTES

BUILDING DIMENSIONS

UCP= N23 W18 S23 E18$ BAS= W26 N8 FOP= E4 N6 W4 S6$ N19 W28 S22 E10 S5 W1 S35 E1 S20 E19 N20E2 N9 E7 FOP= S5 W7 N5E7$ E16 N26$.

EXTRA FEATURES

LN	OB/XF CODE	DESCRIPTION	BLD	CAP	L	W	UNITS	UT	Adj R	ADJ UNIT PRICE	ORIG COND	YEAR ON	YEAR ACTUAL	Q	% COND	OB/XF MKT VALUE	NOTES
1	0190	FPLC PF	0	100	0	0	1.00	UT	1,200.00	1,200.00	100	0	0	3	100	1,200	
2	0166	CONC,PAVMT	0	100	0	0	1.00	UT	0.00	0.00	100	2004	2004	3	100	100	
3	0080	DECKING	0	100	0	0	1.00	UT	0.00	0.00	100	2011	2011	3	100	100	
4	0070	CARPORT UF	0	100	0	0	1.00	UT	0.00	0.00	100	2015	2015	3	100	300	

LAND DESCRIPTION

TOTAL OB/XF 1,700

LN	USE CODE	CLS	LAND USE DESCRIPTION	CAP	RD	LOC ZONE	FRONT	DEPTH	TOT LND UTS	UNIT TYPE	DT	DPTH FACT	% COND	TOT ADJ	UNIT PRICE	ADJ UNIT PRICE	LAND VALUE	OTHER ADJUSTMENTS AND NOTES	YEAR	DENSITY	DECL	FRZ	YR	CONSRV
1	0100	C	SFR	100			0.00	0.00	11,700.00	SF		1.00	1.00	1.00	0.95	0.95	11,115							

REVIEW DATE 11/18/2015 BY DF Total Acres: 0.27 Total Land Value: 11,115 Market: 0 Agricultural: 0 Common: 11,115 PRINTED 11/19/2025 BY SYS