N DIV: LOT 5 BLOCK 1 COLUMBIA PA
472-770, DC 1376-181, WD 1376-18

CATHEY MELLER CREEL LLC
277 SE ELM LOOP
LAKE CITY, FL 32025

2026

00-00-00-12193-000

COLUMBIA COUNTY PROPERTY

BUILDING CHARACTERISTICS

ELEMENT	CD	CONSTRUCTION
Exterior Wall	31	VINYL SID 100
Roof Structur	03	GABLE/HIP 100
Roof Cover	03	COMP SHNGL 100
Interior Wall	04	PLYWOOD 50
Interior Wall	05	DRYWALL 50
Interior Floo	14	CARPET 90
Interior Floo	06	VINYL ASB 10
Air Condition	03	CENTRAL 100
Heating Type	04	AIR DUCTED 100
Bedrooms		3 100
Bathrooms		2 100
Frame	01	NONE 100
Stories	1.	1. 100
Architectual	05	CONV 100
Units		0 100
Condition Adj	02	02 100
Kitchen Adjus	01	01 100
Quality	03	03
DOR CODE	0100	SINGLE FAMILY
MAP NUM		MKT AREA 06
NEIGHBORHOOD/LOC	830317.00	1.00/

AREA TYPE	TOTAL GROSS AREA	PCT OF BASE	YEAR	TOT ADJ AREA	SUBAREA MARKET VALUE
BAS	1,440	100		1,440	91,709
FCP	189	25		47	2,993
FOP	75	30		22	1,401
FST	401	55		221	14,075
TOTALS	2,105			1,730	110,178

MARKET ADJUSTMENTS

TYPE	MDL	EFF. AREA	TOT ADJ PTS	EFF. BASE RATE	REPL. COST NEW	AYB	EYB	ECON	FNCT		NORM	% COND
0100	01	1,730	87.4800	97.98	169,505	1960	1960	0	0	0	35.00	65.00

2 SINGLE FAM 0% - 0 Heated Area: 1440 HX Base Yr

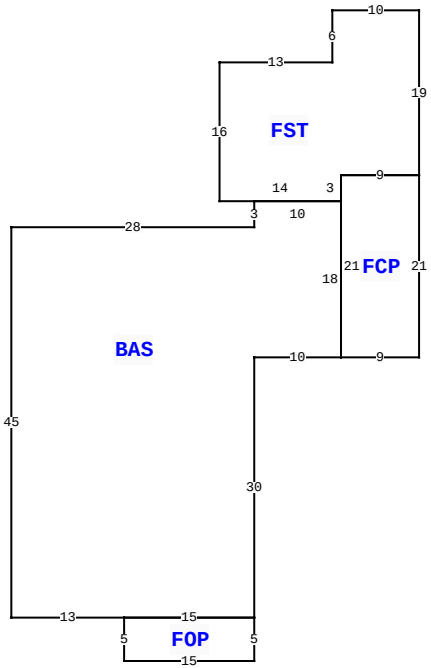

479 NW HILLSBORO ST, LAKE CITY

BLD DATE		LGL DATE	
XF DATE		LAND DATE	04/27/2022 MLU
INC DATE		AG DATE	

VALUATION SUMMARY

VALUATION BY	STANDARD
Tax Group: 1	Tax Dist:
BUILDING MARKET VALUE	110,178
TOTAL MARKET OB/XF VALUE	1,700
TOTAL LAND VALUE - MARKET	6,678
TOTAL MARKET VALUE	118,556
SOH/AGL Deduction	0
ASSESSED VALUE	118,556
TOTAL EXEMPTION VALUE	0
BASE TAXABLE VALUE	118,556
TOTAL JUST VALUE	118,556
NCON VALUE	0
INCOME VALUE	
PREVIOUS YEAR MKT VALUE	118,556

PERMIT NUM	DESCRIPTION	AMT	ISSUED
2291	ADDN SFR	45	01/30/2002

SALES DATA

OFF RECORD Number	DATE	TYPE INST	Q U /	V I /	RSN CD	SALE PRICE
1376/0185	1/09/2019	WD	Q	I	01	45,000
GRANTOR: DANIEL PATRICK MURPHY						
GRANTEE: CATHEY MELLER CREEL						
0610/0798	12/01/1986	WD	Q	I		34,000
GRANTOR:						
GRANTEE:						

BUILDING NOTES

BUILDING DIMENSIONS

BAS= W28 S45 E13 FOP= S5 E15N5 W15$ E15 N30 E10 FCP= E9 N21 W9 S21$ N18 FST= N3 E9 N19 W10 S6 W13 S16 E14$ W10 S3$.

EXTRA FEATURES

LN	OB/XF CODE	DESCRIPTION	BLD	CAP	L	W	UNITS	UT	Adj R	ADJ UNIT PRICE	ORIG COND	YEAR ON	YEAR ACTUAL	Q	% COND	OB/XF MKT VALUE	NOTES
1	0166	CONC,PAVMT	0	0	0	0	1.00	UT	0.00	0.00	100	0	0	3	100	400	
2	0190	FPLC PF	0	0	0	0	1.00	UT	1,200.00	1,200.00	100	0	0	3	100	1,200	
3	0120	CLFENCE 4	0	0	0	0	1.00	UT	0.00	0.00	100	1985	1985	3	100	100	

LAND DESCRIPTION

TOTAL OB/XF 1,700

LN	USE CODE	CLS	LAND USE DESCRIPTION	CAP	RD	LOC ZONE	FRONT	DEPTH	TOT LND UTS	UNIT TYPE	DT	DPTH FACT	% COND	TOT ADJ	UNIT PRICE	ADJ UNIT PRICE	LAND VALUE	OTHER ADJUSTMENTS AND NOTES	YEAR	DENSITY	DECL	FRZ	YR	CONSRV
1	0100	C	SFR	0			0.00	0.00	7,030.00	SF		1.00	1.00	1.00	0.95	0.95	6,678							

REVIEW DATE 11/18/2015 BY DF Total Acres: 0.16 Total Land Value: 6,678 Market: 0 Agricultural: 0 Common: 6,678 PRINTED 11/20/2025 BY SYS