N DIV: S1/2 OF BLOCK 94,

WD 1552-1891

COLUMBIA COUNTY, FLORIDA
PO DRAWER 1529
LAKE CITY, FL 32056

2026

00-00-00-12071-000

COLUMBIA COUNTY PROPERTY

BUILDING CHARACTERISTICS

ELEMENT	CD	CONSTRUCTION
Exterior Wall	17	MSNRY STUC 100
Roof Structur	04	WOOD TRUSS 100
Roof Cover	12	MODULAR MT 100
Interior Wall	05	DRYWALL 100
Interior Floo	08	SHT VINYL 100
Ceiling	01	FIN.SUSPD 100
Air Condition	06	ENG CENTRL 100
Heating Type	09	ENG F AIR 100
Fixtures		15 100
Frame	03	MASONRY 100
Story Height		12 100
RMS		30 100
Stories	2.	2. 100
Units		0 100
Condition Adj	03	03 100
Quality	05	05

DOR CODE	1700	OFFICE BLD 1STY	
MAP NUM		MKT AREA	07
NEIGHBORHOOD/LOC	830317.00	1.00/	

AREA TYPE	TOTAL GROSS AREA	PCT OF BASE	YEAR	TOT ADJ AREA	SUBAREA MARKET VALUE
BAS	5,942	100		5,942	327,959
CAN	25	30		8	441
CAN	48	30		14	773
CAN	172	30		52	2,870
CAN	1,490	30		447	24,672
FOP	28	30		8	441
FST	1,548	50		774	42,719
FUS	3,076	100		3,076	169,775
TOTALS	12,329			10,321	569,651

MARKET ADJUSTMENTS

TYPE	MDL	EFF. AREA	TOT ADJ PTS	EFF. BASE RATE	REPL. COST NEW	AYB	EYB	ECON	FNCT		NORM	% COND
4900	04	10,321	92.0808	68.14	703,273	1950	2007	0	0	0	19.00	81.00

1 OFFICE LOW 0% - 0 Heated Area: 9018 HX Base Yr

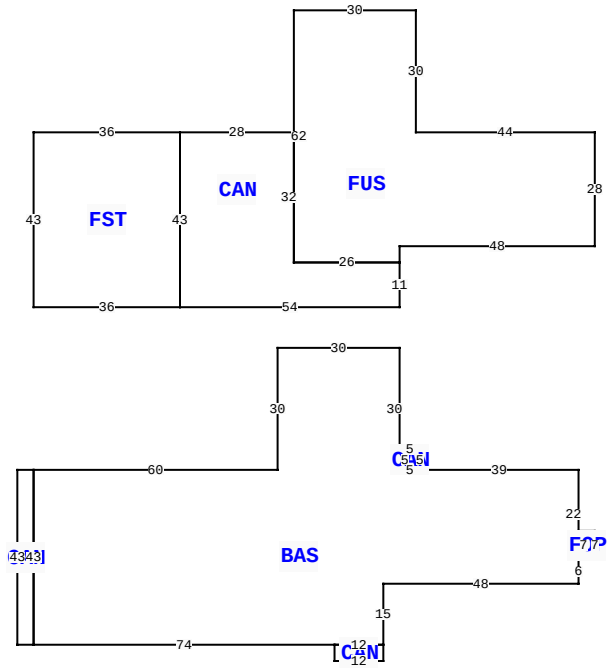

259 NE FRANKLIN ST, LAKE CITY

BLD DATE		LGL DATE	
XF DATE		LAND DATE	04/27/2022 MLU
INC DATE		AG DATE	

VALUATION SUMMARY

VALUATION BY		STANDARD
Tax Group: 1	Tax Dist:	
BUILDING MARKET VALUE		569,651
TOTAL MARKET OB/XF VALUE		35,428
TOTAL LAND VALUE - MARKET		21,780
TOTAL MARKET VALUE		626,859
SOH/AGL Deduction		0
ASSESSED VALUE		626,859
TOTAL EXEMPTION VALUE	20	626,859
BASE TAXABLE VALUE		0
TOTAL JUST VALUE		626,859
NCON VALUE		0
INCOME VALUE		
PREVIOUS YEAR MKT VALUE		633,892

PERMIT NUM	DESCRIPTION	AMT	ISSUED
1085	ADDN COMM	0	01/07/2009
718	DEMOLISH	50	04/23/2008
25316	REMODEL	0	12/18/2006

SALES DATA

OFF RECORD Number	DATE	TYPE INST	Q U	V I	RSN CD	SALE PRICE
1552/1891	10/13/2025	WD	U	I	18	100
GRANTOR: LAKE SHORE HOSPITAL A						
GRANTEE: COLUMBIA COUNTY, FL						
1105/2208	12/13/2006	WD	Q	I	03	0
GRANTOR: COLUMBIA COUNTY, FLOR						
GRANTEE: LAKE SHORE HOSPITAL						

BUILDING NOTES

BUILDING DIMENSIONS

BAS= W30 S30 W60 CAN= W4 S43 E4 N43$ S43 E74 CAN= S4 E12 N4 W12$ E12 N15 E48 N6 FOP= E4 N7 W4 S7$ N22 W39 CAN= N5 W5 S5 E5$ W5 N30$ PTR=N10 CAN= N11 FUS= N4 E48 N28 W44 N30 W30 S62 E26$ W26 N32 W28 FST= W36 S43 E36 N43$ S43 E54$ S10$.

EXTRA FEATURES

LN	OB/XF CODE	DESCRIPTION	BLD	CAP	L	W	UNITS	UT	Adj R	ADJ UNIT PRICE	ORIG COND	YEAR ON	YEAR ACTUAL	Q	% COND	OB/XF MKT VALUE	NOTES
1	0260	PAVEMENT-A	0	0	0	0	1.00	UT	0.00	0.00	100	0	0	3	100	500	
2	0166	CONC,PAVMT	0	0	0	0	2,976.00	UT	3.00	3.00	100	2007	2007	3	100	8,928	
3	0100	ELEV.PASS	0	0	0	0	1.00	UT	0.00	0.00	100	2007	2007	3	100	26,000	

LAND DESCRIPTION

TOTAL OB/XF 35,428

LN	USE CODE	CLS	LAND USE DESCRIPTION	CAP	RD	LOC ZONE	FRONT	DEPTH	TOT LND UTS	UNIT TYPE	DT	DPTH FACT	% COND	TOT ADJ	UNIT PRICE	ADJ UNIT PRICE	LAND VALUE	OTHER ADJUSTMENTS AND NOTES	YEAR	DENSITY	DECL	FRZ	YR	CONSRV
1	1700	C	1STORY OFF	0		00	0.00	0.00	21,780.00	SF		1.00	1.00	1.00	1.00	1.00	21,780							

REVIEW DATE 10/29/2015 BY DF Total Acres: 0.50 Total Land Value: 21,780 Market: 0 Agricultural: 0 Common: 21,780 PRINTED 11/05/2025 BY SYS