COMM AT SW COR OF NE1/4 OF THE
NW1/4 RUN E ALONG THE S LINE
78.46 FT TO INTERS WITH S'ERLY

SOUTHWEST GEORGIA
OIL COMPANY INC, P O BOX 1510
BAINBRIDGE, GA 39818

2026

00-00-00-11231-000

COLUMBIA COUNTY PROPERTY

BUILDING CHARACTERISTICS

ELEMENT	CD	CONSTRUCTION
Exterior Wall	15	CONC BLOCK 100
Roof Structur	09	RIDGE FRME 100
Roof Cover	04	BUILT-UP 100
Interior Wall	05	DRYWALL 100
Interior Floo	07	CORK/VTILE 100
Ceiling	01	FIN.SUSPD 100
Air Condition	06	ENG CENTRL 100
Heating Type	09	ENG F AIR 100
Fixtures		6 100
Frame	03	MASONRY 100
Story Height		10 100
RMS		3 100
Stories	1.	1. 100
Units		0 100
Condition Adj	04	04 100
Quality	05	05
DOR CODE	1126	CONV STORE/GAS
MAP NUM		MKT AREA 07
NEIGHBORHOOD/LOC	810317.00	1.00/

AREA TYPE	TOTAL GROSS AREA	PCT OF BASE	YEAR	TOT ADJ AREA	SUBAREA MARKET VALUE
BAS	56	100		56	1,984
BAS	140	100		140	4,960
BAS	600	100		600	21,255
BAS	1,792	100		1,792	63,482
CAN	837	30		251	8,892
CAN	936	30		281	9,955
CAN	1,224	30		367	13,001
SFB	1,271	80		1,017	36,027
TOTALS	6,856			4,504	159,554

MARKET ADJUSTMENTS

TYPE	MDL	EFF. AREA	TOT ADJ PTS	EFF. BASE RATE	REPL. COST NEW	AYB	EYB	ECON	FNCT		NORM	% COND
4300	04	4,504	94.4724	70.85	319,108	1986	1986	0	0	0	50.00	50.00

1 NBHD CONVE 0% - 0 Heated Area: 3859 HX Base Yr

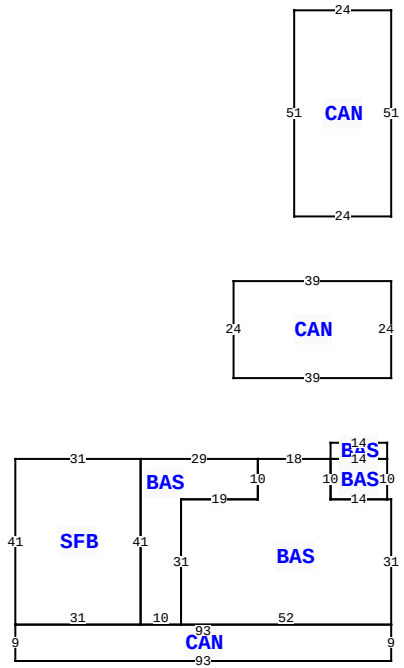

1101 N MARION AVE, LAKE CITY

BLD DATE		LGL DATE	
XF DATE		LAND DATE	04/27/2022 MLU
INC DATE		AG DATE	

VALUATION SUMMARY

VALUATION BY	STANDARD
Tax Group: 1	Tax Dist:
BUILDING MARKET VALUE	159,554
TOTAL MARKET OB/XF VALUE	26,322
TOTAL LAND VALUE - MARKET	145,382
TOTAL MARKET VALUE	331,258
SOH/AGL Deduction	0
ASSESSED VALUE	331,258
TOTAL EXEMPTION VALUE	0
BASE TAXABLE VALUE	331,258
TOTAL JUST VALUE	331,258
NCON VALUE	0
INCOME VALUE	
PREVIOUS YEAR MKT VALUE	331,258

PERMIT NUM	DESCRIPTION	AMT	ISSUED
000045771	Electrical Servic	1,950	10/25/2022
000044457	Roof Replacement	57,773	05/17/2022
381	REMODEL	218	10/17/2007
229	REMODEL	300	07/30/2007
219	REMODEL	740	06/25/2007

SALES DATA

OFF RECORD Number	DATE	TYPE INST	Q U	V I	RSN CD	SALE PRICE
1293/2074	4/28/2015	WD	U	I	43	19,812,600

GRANTOR: STAFFORD L SCAFF JR

GRANTEE: SOUTHWEST GEORGIA O

BUILDING NOTES

BUILDING DIMENSIONS

BAS= W1BAS= N10 BAS= N4 W14S4 E14$ W14 S10 E14$ W14 N10 W18 BAS= W29 SFB= W31 S41 CAN= S9 E93 N9 W93$ E31 N41$ S41 E10 N31 E19 N10$ S10 W19 S31 E52 N31$ PTR= N30 CAN= N24W39 S24 E39$ S30 PTR=N70 CAN= N51 W24 S51 E24$ S70$.

EXTRA FEATURES

LN	OB/XF CODE	DESCRIPTION	BLD	CAP	L	W	UNITS	UT	Adj R	ADJ UNIT PRICE	ORIG COND	YEAR ON	YEAR ACTUAL	Q	% COND	OB/XF MKT VALUE	NOTES
1	0166	CONC,PAVMT	0	0	0	0	4,340.00	UT	3.00	3.00	100	2007	2007	3	100	13,020	
2	0166	CONC,PAVMT	0	0	0	0	1.00	UT	2,854.00	2,854.00	80	0	0	3	80	2,283	
3	0260	PAVEMENT-A	0	0	0	0	1.00	UT	10,623.90	10,623.90	80	0	0	3	80	8,499	
4	0253	LIGHTING	0	0	0	0	1.00	UT	0.00	0.00	100	1993	1993	3	100	500	
5	0164	CONC BIN	0	0	10	12	120.00	UT	8.50	8.50	100	2003	2003	3	100	1,020	
6	0140	CLFENCE 6	0	0	0	0	1.00	UT	0.00	0.00	100	0	0	3	100	800	
7	0296	SHED METAL	0	0	0	0	1.00	UT	0.00	0.00	100	2011	2011	3	100	200	

LAND DESCRIPTION

TOTAL OB/XF 26,322

LN	USE CODE	CLS	LAND USE DESCRIPTION	CAP	RD	LOC ZONE	FRONT	DEPTH	TOT LND UTS	UNIT TYPE	DT	DPTH FACT	% COND	TOT ADJ	UNIT PRICE	ADJ UNIT PRICE	LAND VALUE	OTHER ADJUSTMENTS AND NOTES	YEAR	DENSITY	DECL	FRZ	YR	CONSRV
1	1410	C	CONV STORE	0		*CG	0.00	0.00	116,305.20	SF		1.00	1.00	1.25	1.00	1.25	145,382							

REVIEW DATE 07/15/2022 BY ME Total Acres: 2.67 Total Land Value: 145,382 Market: 0 Agricultural: 0 Common: 145,382 PRINTED 11/19/2025 BY SYS