NE DIV: E1/2 OF BLOCK 33.

LE 363-544, 596-271,647, DC 846-

RILEY WINOLA F
11071 LOTHMORE RD
JACKSONVILLE, FL 32221

2026

00-00-00-10934-000

COLUMBIA COUNTY PROPERTY

BUILDING CHARACTERISTICS

ELEMENT	CD	CONSTRUCTION
Exterior Wall	19	COMMON BRK 100
Roof Structur	03	GABLE/HIP 100
Roof Cover	14	PREFIN MT 100
Interior Wall	05	DRYWALL 100
Interior Floo	14	CARPET 90
Interior Floo	06	VINYL ASB 10
Air Condition	03	CENTRAL 100
Heating Type	04	AIR DUCTED 100
Bedrooms		3 100
Bathrooms		2 100
Frame	01	NONE 100
Stories	1.	1. 100
Architectual	05	CONV 100
Units		0 100
Condition Adj	03	03 100
Kitchen Adjus	01	01 100
Quality	05	05
DOR CODE	0100	SINGLE FAMILY
MAP NUM		MKT AREA 07
NEIGHBORHOOD/LOC	810317.00	1.00/

AREA TYPE	TOTAL GROSS AREA	PCT OF BASE	YEAR	TOT ADJ AREA	SUBAREA MARKET VALUE
BAS	2,309	100		2,309	166,566
FGR	552	55		304	21,930
UDU	300	55		165	11,903
TOTALS	3,161			2,778	200,399

MARKET ADJUSTMENTS

TYPE	MDL	EFF. AREA	TOT ADJ PTS	EFF. BASE RATE	REPL. COST NEW	AYB	EYB	ECON	FNCT		NORM	% COND
0100	01	2,778	117.1100	131.16	364,362	1969	1969	10	0	0	35.00	55.00

1 SINGLE FAM 0% - 0 Heated Area: 2309 HX Base Yr

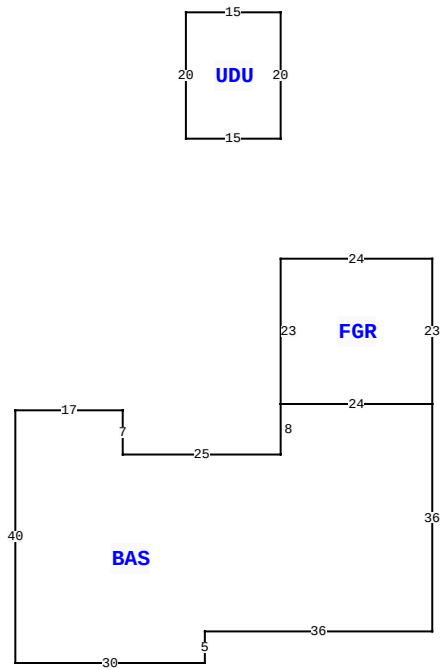

455 NE MARTIN LUTHER KING ST, LAKE CITY

BLD DATE		LGL DATE	
XF DATE		LAND DATE	
INC DATE		AG DATE	

VALUATION SUMMARY

VALUATION BY	STANDARD
Tax Group: 1	Tax Dist:
BUILDING MARKET VALUE	200,399
TOTAL MARKET OB/XF VALUE	3,050
TOTAL LAND VALUE - MARKET	8,202
TOTAL MARKET VALUE	211,651
SOH/AGL Deduction	0
ASSESSED VALUE	211,651
TOTAL EXEMPTION VALUE	0
BASE TAXABLE VALUE	211,651
TOTAL JUST VALUE	211,651
NCON VALUE	0
INCOME VALUE	
PREVIOUS YEAR MKT VALUE	211,651

PERMIT NUM	DESCRIPTION	AMT	ISSUED
000045637	Remodel	18,000	10/06/2022

SALES DATA

OFF RECORD Number	DATE	TYPE INST	Q U	V I	RSN CD	SALE PRICE
1451/2076	9/30/2021	LE	U	I	14	100
GRANTOR: RILEY WINOLA F						
GRANTEE: CHAPMAN MALYNDA MIC						
1283/0039	10/15/2014	PB	U	I	18	100
GRANTOR: CLERK OF COURT (CLARE						
GRANTEE: WINOLA F RILEY						

BUILDING NOTES

BUILDING DIMENSIONS

BAS= W25 N7 W17 S40 E30 N5 E36 N36 FGR= N23 W24 S23 E24$W24 S8$ PTR=N50 UDU= N20 W15 S20 E15$ S50$.

EXTRA FEATURES

LN	OB/XF CODE	DESCRIPTION	BLD	CAP	L	W	UNITS	UT	Adj R	ADJ UNIT PRICE	ORIG COND	YEAR ON	YEAR ACTUAL	Q	% COND	OB/XF MKT VALUE	NOTES
1	0166	CONC,PAVMT	0	0	0	0	1.00	UT	0.00	0.00	100	0	0	3	100	100	
2	0258	PATIO	0	0	0	0	1.00	UT	0.00	0.00	100	0	0	3	100	150	
3	0120	CLFENCE 4	0	0	0	0	1.00	UT	0.00	0.00	100	2004	2004	3	100	500	
4	0130	CLFENCE 5	0	0	0	0	1.00	UT	0.00	0.00	100	2011	2011	3	100	100	
5	0060	CARPORT F	0	0	0	0	1.00	UT	0.00	0.00	100	2011	2011	3	100	600	
6	0296	SHED METAL	0	0	0	0	1.00	UT	0.00	0.00	100	2015	2015	3	100	1,600	

LAND DESCRIPTION

TOTAL OB/XF 3,050

LN	USE CODE	CLS	LAND USE DESCRIPTION	CAP	RD	LOC ZONE	FRONT	DEPTH	TOT LND UTS	UNIT TYPE	DT	DPTH FACT	% COND	TOT ADJ	UNIT PRICE	ADJ UNIT PRICE	LAND VALUE	OTHER ADJUSTMENTS AND NOTES	YEAR	DENSITY	DECL	FRZ	YR	CONSRV
1	0100	C	SFR	0		*RSF-1	102.00	190.00	19,300.00	SF		1.00	1.00	0.85	0.50	0.43	8,202							

REVIEW DATE 10/21/2015 BY DF Total Acres: 0.44 Total Land Value: 8,202 Market: 0 Agricultural: 0 Common: 8,202 PRINTED 11/07/2025 BY SYS