NE DIV: COMM AT SW COR OF BLK 17
FOR POB, CONT N 159.32 FT TO S R
PL, E ALONG S R/W 204.21 FT, SE

278 NE TRINITY PLACE LAND TRUST
524 HIGHLAND AVE
ORLANDO, FL 32801

2026

00-00-00-10890-000

COLUMBIA COUNTY PROPERTY

BUILDING CHARACTERISTICS

ELEMENT	CD	CONSTRUCTION
Exterior Wall	32	HARDIE BRD 100
Roof Structur	03	GABLE/HIP 100
Roof Cover	12	MODULAR MT 100
Interior Wall	05	DRYWALL 100
Interior Floo	15	HARDTILE 100
Air Condition	02	WINDOW 100
Heating Type	02	CONVECTION 100
Bedrooms		1 100
Bathrooms		1 100
Frame	01	NONE 100
Stories	1.	1. 100
Architectual	05	CONV 100
Units		0 100
Condition Adj	02	02 100
Kitchen Adjus	01	01 100
Quality	03	03
DOR CODE	0800	MULTI-FAM <10
MAP NUM		MKT AREA 07
NEIGHBORHOOD/LOC	810317.00	1.00/

AREA TYPE	TOTAL GROSS AREA	PCT OF BASE	YEAR	TOT ADJ AREA	SUBAREA MARKET VALUE
BAS	520	100		520	26,375
BAS	520	100		520	26,375
BAS	520	100		520	26,375
BAS	520	100		520	26,375
BAS	520	100		520	26,375
BAS	520	100		520	26,375
BAS	520	100		520	26,375
TOTALS	3,640			3,640	184,625

MARKET ADJUSTMENTS

TYPE	MDL	EFF. AREA	TOT ADJ PTS	EFF. BASE RATE	REPL. COST NEW	AYB	EYB	ECON	FNCT		NORM	% COND
0100	01	3,640	82.3365	92.22	335,681	1945	1945	10	0	0	35.00	55.00

1 SINGLE FAM 0% - 0 Heated Area: 3640 HX Base Yr

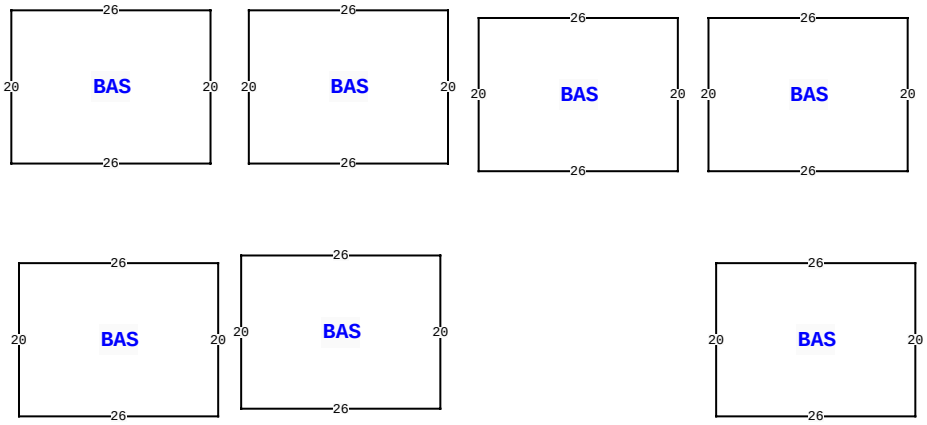

278 NE TRINITY PL, LAKE CITY

BLD DATE		LGL DATE	
XF DATE		LAND DATE	
INC DATE		AG DATE	

VALUATION SUMMARY

VALUATION BY	STANDARD
Tax Group: 1	Tax Dist:
BUILDING MARKET VALUE	228,105
TOTAL MARKET OB/XF VALUE	0
TOTAL LAND VALUE - MARKET	8,662
TOTAL MARKET VALUE	236,767
SOH/AGL Deduction	0
ASSESSED VALUE	236,767
TOTAL EXEMPTION VALUE	0
BASE TAXABLE VALUE	236,767
TOTAL JUST VALUE	236,767
NCON VALUE	0
INCOME VALUE	
PREVIOUS YEAR MKT VALUE	236,767

PERMIT NUM	DESCRIPTION	AMT	ISSUED
000044809	Roof Replacement	13,016	06/27/2022
4035	ADDN SFR	50	11/22/2006

SALES DATA

OFF RECORD Number	DATE	TYPE INST	Q U	V I	RSN CD	SALE PRICE
1510/961	3/13/2024	WD	U	I	11	100
GRANTOR: WIDE ANGLE INVESTMENT						
GRANTEE: 278 NE TRINITY PLAC						
1205/2009	11/01/2010	QC	U	I	11	100
GRANTOR: CHARLES & VIRGINIA SM						
GRANTEE: WIDE ANGLE INVESTME						

BUILDING NOTES

BUILDING DIMENSIONS

BAS=[ORIG=39,2] W26 S20 E26 N20 $
BAS=[ORIG=9,-30] W26 S20 E26 N20 $
BAS=[ORIG=40,-30] W26 S20 E26 N20 $
BAS=[ORIG=10,3] W26 S20 E26 N20 $
BAS=[MULTIPLIER=1;ORIG=70,-29] W26 S20 E26 N20 $
BAS=[ORIG=100,-29] W26 S20 E26 N20 $
BAS=[MULTIPLIER=1;ORIG=101,3] W26 S20 E26 N20 $
.

EXTRA FEATURES

LN	OB/XF CODE	DESCRIPTION	BLD	CAP	L	W	UNITS	UT	Adj R	ADJ UNIT PRICE	ORIG COND	YEAR ON	YEAR ACTUAL	Q	% COND	OB/XF MKT VALUE	NOTES

LAND DESCRIPTION

TOTAL OB/XF 0

LN	USE CODE	CLS	LAND USE DESCRIPTION	CAP	RD	LOC ZONE	FRONT	DEPTH	TOT LND UTS	UNIT TYPE	DT	DPTH FACT	% COND	TOT ADJ	UNIT PRICE	ADJ UNIT PRICE	LAND VALUE	OTHER ADJUSTMENTS AND NOTES	YEAR	DENSITY	DECL	FRZ	YR	CONSRV
1	0800	C	MULTI-FAM	0		*I	150.00	210.00	31,500.00	SF		1.00	1.00	0.55	0.50	0.28	8,662							

REVIEW DATE 10/28/2015 BY DF Total Acres: 0.72 Total Land Value: 8,662 Market: 0 Agricultural: 0 Common: 8,662 PRINTED 10/20/2025 BY SYS

NE DIV: COMM AT SW COR OF BLK 17
FOR POB, CONT N 159.32 FT TO S R
PL, E ALONG S R/W 204.21 FT, SE

278 NE TRINITY PLACE LAND TRUST
524 HIGHLAND AVE
ORLANDO, FL 32801

2026

00-00-00-10890-000

BUILDING CHARACTERISTICS

ELEMENT	CD	CONSTRUCTION
Exterior Wall	15	CONC BLOCK 100
Roof Structur	03	GABLE/HIP 100
Roof Cover	01	MINIMUM 100
Interior Wall	01	MINIMUM 100
Interior Floo	03	CONC FINSH 100
Air Condition	02	WINDOW 100
Heating Type	02	CONVECTION 100
Bedrooms		2 100
Bathrooms		1 100
Frame	03	MASONRY 100
Story Height		0 100
RMS		0 100
Stories	1.	1. 100
Units		2 100
Condition Adj	02	02 100
Kitchen Adjus	01	01 100
Quality	01	01
DOR CODE	0800	MULTI-FAM <10
MAP NUM		MKT AREA 07
NEIGHBORHOOD/LOC	810317.00	1.00/

AREA TYPE	TOTAL GROSS AREA	PCT OF BASE	YEAR	TOT ADJ AREA	SUBAREA MARKET VALUE
BAS	1,080	100		1,080	14,308
BAS	1,080	100		1,080	14,308
BAS	1,080	100		1,080	14,308
FOP	24	30		7	93
FOP	24	30		7	93
FOP	24	30		7	93
FOP	24	30		7	93
FOP	24	30		7	93
FOP	24	30		7	93
TOTALS	3,384			3,282	43,480

MARKET ADJUSTMENTS

TYPE	MDL	EFF. AREA	TOT ADJ PTS	EFF. BASE RATE	REPL. COST NEW	AYB	EYB	ECON	FNCT	AP	NORM	% COND
2700	03	3,282	51.9480	44.16	144,933	1945	1960	0	0	20	50.00	30.00

2 DUPLEX 0% - 0 Heated Area: 3240 HX Base Yr

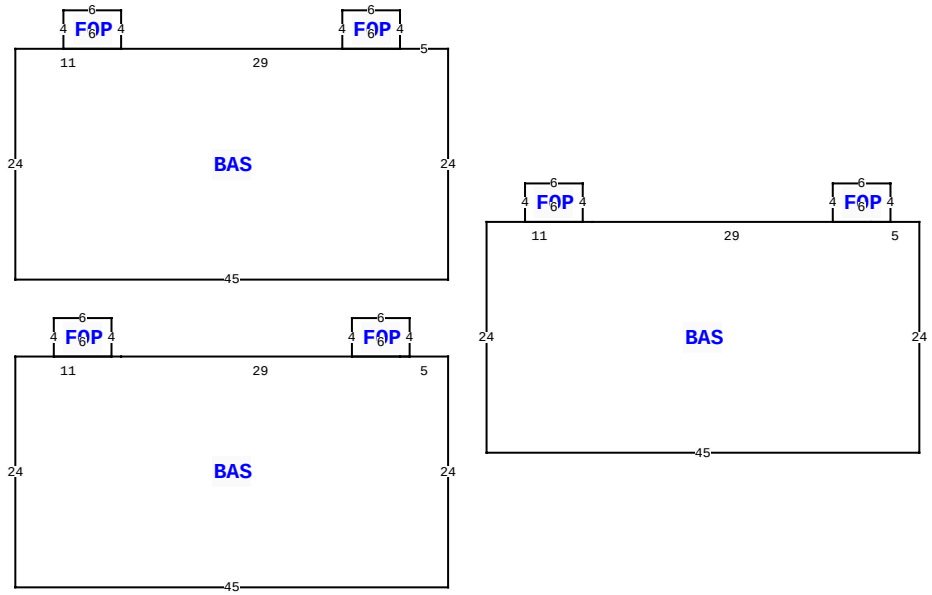

278 NE TRINITY PL, LAKE CITY

BLD DATE		LGL DATE	
XF DATE		LAND DATE	
INC DATE		AG DATE	

COLUMBIA COUNTY PROPERTY

PAGE 2 of 2 1

VALUATION SUMMARY

VALUATION BY	STANDARD
Tax Group: 1	Tax Dist:
BUILDING MARKET VALUE	228,105
TOTAL MARKET OB/XF VALUE	0
TOTAL LAND VALUE - MARKET	8,662
TOTAL MARKET VALUE	236,767
SOH/AGL Deduction	0
ASSESSED VALUE	236,767
TOTAL EXEMPTION VALUE	0
BASE TAXABLE VALUE	236,767
TOTAL JUST VALUE	236,767
NCON VALUE	0
INCOME VALUE	
PREVIOUS YEAR MKT VALUE	236,767

PERMIT NUM	DESCRIPTION	AMT	ISSUED

SALES DATA

OFF RECORD Number	DATE	TYPE INST	Q U /	V I /	RSN CD	SALE PRICE
1510/961	3/13/2024	WD	U	I	11	100
GRANTOR: WIDE ANGLE INVESTMENT						
GRANTEE: 278 NE TRINITY PLAC						
1205/2009	11/01/2010	QC	U	I	11	100
GRANTOR: CHARLES & VIRGINIA SM						
GRANTEE: WIDE ANGLE INVESTME						

BUILDING NOTES

BUILDING DIMENSIONS

BAS=[ORIG=45,0] W5 W29 W11 S24 E45 N24 $BAS=[ORIG=94,-14] W5 W29 W11 S24 E45 N24 $BAS=[ORIG=45,-32] W5 W29 W11 S24 E45 N24 $FOP=[ORIG=41,0] N4 W6 S4 E6 $FOP=[ORIG=10,0] N4 W6 S4 E6 $FOP=[ORIG=91,-14] N4 W6 S4 E6 $FOP=[ORIG=59,-14] N4 W6 S4 E6 $FOP=[ORIG=40,-32] N4 W6 S4 E6 $FOP=[ORIG=11,-32] N4 W6 S4 E6 $.

EXTRA FEATURES

LN	OB/XF CODE	DESCRIPTION	BLD	CAP	L	W	UNITS	UT	Adj R	ADJ UNIT PRICE	ORIG COND	YEAR ON	YEAR ACTUAL	Q	% COND	OB/XF MKT VALUE	NOTES

LAND DESCRIPTION

TOTAL OB/XF 0

LN	USE CODE	CLS	LAND USE DESCRIPTION	CAP	RD	LOC ZONE	FRONT	DEPTH	TOT LND UTS	UNIT TYPE	DT	DPTH FACT	% COND	TOT ADJ	UNIT PRICE	ADJ UNIT PRICE	LAND VALUE	OTHER ADJUSTMENTS AND NOTES	YEAR	DENSITY	DECL	FRZ	YR	CONSRV

REVIEW DATE 10/28/2015 BY DF Total Acres: 0.72 Total Land Value: 8,662 Market: 0 Agricultural: 0 Common: 8,662 PRINTED 10/20/2025 BY SYS