LOTS 1, 2, 15 & 16 BLOCK 6 TOWN
CLOSED ALLEY LYING ADJ TO SAID L
NOS 2009R-7 & 2009R-8 DESC IN OR

GILMORE DONALD JOSEPH
7260 SE COUNTY LINE RD
LULU, FL 32061

2026

00-00-00-10451-000

COLUMBIA COUNTY PROPERTY

BUILDING CHARACTERISTICS

ELEMENT	CD	CONSTRUCTION
Exterior Wall	15	CONC BLOCK 100
Roof Structur	08	IRREGULAR 100
Roof Cover	03	COMP SHNGL 100
Interior Wall	02	WALL BD/WD 80
Interior Wall	05	DRYWALL 20
Interior Floo	14	CARPET 90
Interior Floo	13	LAM/VNLPLK 10
Air Condition	03	CENTRAL 100
Heating Type	04	AIR DUCTED 100
Bedrooms		3 100
Bathrooms		1 100
Frame	01	NONE 100
Stories	1.	1. 100
Architectual	05	CONV 100
Units		0 100
Condition Adj	04	04 100
Kitchen Adjus	01	01 100
Quality	05	05
DOR CODE	0100	SINGLE FAMILY
MAP NUM		MKT AREA 04
NEIGHBORHOOD/LOC	35418.010	1.00/

AREA TYPE	TOTAL GROSS AREA	PCT OF BASE	YEAR	TOT ADJ AREA	SUBAREA MARKET VALUE
BAS	1,516	100		1,516	135,451
FOP	56	30		17	1,519
FOP	144	30		43	3,842
UCP	151	20		30	2,681
UEP	84	60		50	4,468
USP	150	35		52	4,646
UST	49	45		22	1,966
TOTALS	2,150			1,730	154,571

MARKET ADJUSTMENTS

TYPE	MDL	EFF. AREA	TOT ADJ PTS	EFF. BASE RATE	REPL. COST NEW	AYB	EYB	ECON	FNCT		NORM	% COND
0100	01	1,730	106.3700	119.13	206,095	1961	2005	0	0	0	25.00	75.00

1 SINGLE FAM 100% - 2025 Heated Area: 1516 HX Base Yr 2025

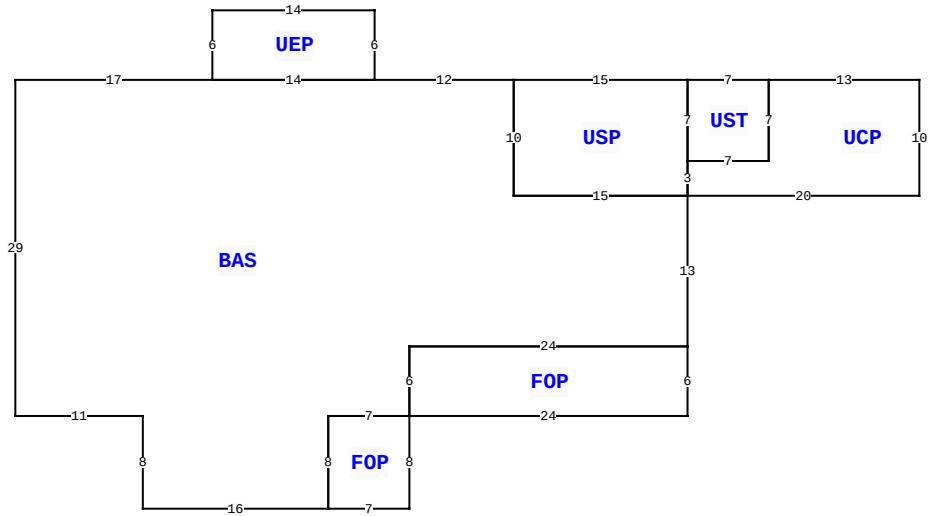

7260 SE COUNTY LINE RD, LULU

BLD DATE		LGL DATE	
XF DATE		LAND DATE	
INC DATE		AG DATE	

VALUATION SUMMARY

VALUATION BY		STANDARD
Tax Group: 3	Tax Dist:	
BUILDING MARKET VALUE		154,571
TOTAL MARKET OB/XF VALUE		1,000
TOTAL LAND VALUE - MARKET		4,531
TOTAL MARKET VALUE		160,102
SOH/AGL Deduction		0
ASSESSED VALUE		160,102
TOTAL EXEMPTION VALUE	HX HB 13	160,102
BASE TAXABLE VALUE		0
TOTAL JUST VALUE		160,102
NCON VALUE		0
INCOME VALUE		
PREVIOUS YEAR MKT VALUE		162,678

PERMIT NUM	DESCRIPTION	AMT	ISSUED

SALES DATA

OFF RECORD Number	DATE	TYPE INST	Q U	V I	RSN CD	SALE PRICE
1511/2527	4/05/2024	WD	Q	I	01	199,900
GRANTOR: OLLIROX HOMES RESTORA						
GRANTEE: GILMORE DONALD JOSE						
1501/2034	10/25/2023	WD	U	I	37	95,000
GRANTOR: GUTHRIE PRISCILLA JE						
GRANTEE: OLLIROX HOMES RESTO						

BUILDING NOTES

BUILDING DIMENSIONS

BAS= W17 S29 E11 S8 E16 FOP= E7 N8 W7 S8$ N8 E7 FOP= E24 N6 W24S6$ N6 E24 N13UCP= E20 N10 W13UST= W7 S7 E7 N7$ S7 W7 USP= N7 W15 S10 E15 N3$ S3$W15 N10 W12 UEP= N6W14 S6 E14 $ W14$.

EXTRA FEATURES

LN	OB/XF CODE	DESCRIPTION	BLD	CAP	L	W	UNITS	UT	Adj R	ADJ UNIT PRICE	ORIG COND	YEAR ON	YEAR ACTUAL	Q	% COND	OB/XF MKT VALUE	NOTES
1	0120	CLFENCE 4	0	100	0	0	1.00	UT	0.00	0.00	100	1993	1993	3	100	300	
2	0296	SHED METAL	0	100	0	0	1.00	UT	0.00	0.00	100	2005	2005	3	100	300	
3	0070	CARPORT UF	0	100	0	0	1.00	UT	800.00	800.00	50	2005	2005	3	50	400	

LAND DESCRIPTION

TOTAL OB/XF 1,000

LN	USE CODE	CLS	LAND USE DESCRIPTION	CAP	RD	LOC ZONE	FRONT	DEPTH	TOT LND UTS	UNIT TYPE	DT	DPTH FACT	% COND	TOT ADJ	UNIT PRICE	ADJ UNIT PRICE	LAND VALUE	OTHER ADJUSTMENTS AND NOTES	YEAR	DENSITY	DECL	FRZ	YR	CONSRV
1	0100	C	SFR	100			0.00	0.00	14,500.00	SF		1.00	1.00	1.25	0.25	0.31	4,531							

REVIEW DATE 04/10/2024 BY ME Total Acres: 0.33 Total Land Value: 4,531 Market: 0 Agricultural: 0 Common: 4,531 PRINTED 11/19/2025 BY SYS