LOT 2 BLOCK 1 LAKE FOREST S/D
UNIT 2.

KING GORDON/KING EILEEN
785 SW VALLEY WAY
LAKE CITY, FL 32025

2026

00-00-00-07875-000

COLUMBIA COUNTY PROPERTY

BUILDING CHARACTERISTICS

ELEMENT	CD	CONSTRUCTION
Exterior Wall	19	COMMON BRK 100
Roof Structur	03	GABLE/HIP 100
Roof Cover	03	COMP SHNGL 100
Interior Wall	05	DRYWALL 100
Interior Floo	14	CARPET 100
Air Condition	03	CENTRAL 100
Heating Type	04	AIR DUCTED 100
Bedrooms		5 100
Bathrooms		3.5 100
Frame	01	NONE 100
Stories	1.5	1.5 100
Architectual	05	CONV 100
Units		0 100
Condition Adj	02	02 100
Kitchen Adjus	01	01 100
Quality	05	05
DOR CODE	0100	SINGLE FAMILY
MAP NUM		MKT AREA 06
NEIGHBORHOOD/LOC	6417.0100	1.00/

AREA TYPE	TOTAL GROSS AREA	PCT OF BASE	YEAR	TOT ADJ AREA	SUBAREA MARKET VALUE
BAS	1,691	100		1,691	127,095
FOP	84	30		25	1,879
FST	180	55		99	7,441
FUS	1,247	100		1,247	93,724
UOP	258	20		52	3,908
TOTALS	3,460			3,114	234,047

MARKET ADJUSTMENTS

TYPE	MDL	EFF. AREA	TOT ADJ PTS	EFF. BASE RATE	REPL. COST NEW	AYB	EYB	ECON	FNCT		NORM	% COND
0100	01	3,114	103.2412	115.63	360,072	1966	1980	0	0	0	35.00	65.00

1 SINGLE FAM 100% - 2021 Heated Area: 2938 HX Base Yr 2021

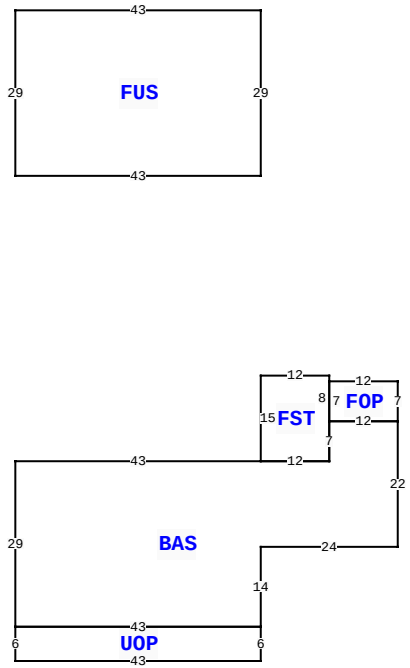

785 SW VALLEY WAY, LAKE CITY

BLD DATE		LGL DATE	
XF DATE		LAND DATE	04/21/2023 MLU
INC DATE		AG DATE	

VALUATION SUMMARY

VALUATION BY		STANDARD
Tax Group: 1	Tax Dist:	
BUILDING MARKET VALUE		234,047
TOTAL MARKET OB/XF VALUE		0
TOTAL LAND VALUE - MARKET		18,500
TOTAL MARKET VALUE		252,547
SOH/AGL Deduction		67,380
ASSESSED VALUE		185,167
TOTAL EXEMPTION VALUE	HX HB	50,722
BASE TAXABLE VALUE		134,445
TOTAL JUST VALUE		252,547
NCON VALUE		0
INCOME VALUE		
PREVIOUS YEAR MKT VALUE		252,547

SALE:1:1: CLIFFORD E & MARGARET FRIER JTWRS

PERMIT NUM	DESCRIPTION	AMT	ISSUED

SALES DATA

OFF RECORD Number	DATE	TYPE INST	Q U	V I	RSN CD	SALE PRICE
1422/0755	10/19/2020	WD	Q	I	01	168,500
GRANTOR: GWENDOLYN COUSINO						
GRANTEE: GORDON & EILEEN KIN						
1042/0494	3/29/2005	WD	Q	I		182,900
GRANTOR: ARCHIE A & SHARON B F						
GRANTEE: GWENDOLYN COUSINO						

BUILDING NOTES

BUILDING DIMENSIONS

BAS= W43 S29 UOP= S6 E43 N6 W43$E43 N14 E24 N22 FOP= N7 W12 S7 E12$ W12 FST= N8 W12 S15 E12 N7$ S7 W12$ PTR=N50 FUS= N29 W43 S29 E43$ S50$.

EXTRA FEATURES

LN	OB/XF CODE	DESCRIPTION	BLD	CAP	L	W	UNITS	UT	Adj R	ADJ UNIT PRICE	ORIG COND	YEAR ON	YEAR ACTUAL	Q	% COND	OB/XF MKT VALUE	NOTES

LAND DESCRIPTION

TOTAL OB/XF 0

LN	USE CODE	CLS	LAND USE DESCRIPTION	CAP	RD	LOC ZONE	FRONT	DEPTH	TOT LND UTS	UNIT TYPE	DT	DPTH FACT	% COND	TOT ADJ	UNIT PRICE	ADJ UNIT PRICE	LAND VALUE	OTHER ADJUSTMENTS AND NOTES	YEAR	DENSITY	DECL	FRZ	YR	CONSRV
1	0100	C	SFR	100		*RSF-2	200.00	150.00	1.00	LT		1.00	1.00	1.00	18,500.00	18,500.00	18,500							

REVIEW DATE 10/26/2016 BY DF Total Acres: 0.34 Total Land Value: 18,500 Market: 0 Agricultural: 0 Common: 18,500 PRINTED 11/07/2025 BY SYS