LOT 6 BLOCK 1 FOREST HILLS S/D U

WD 1093-1502

FORD SARAH R TRUSTEE
214 SE PINE DR
LAKE CITY, FL 32025

2026

00-00-00-07690-000

COLUMBIA COUNTY PROPERTY

BUILDING CHARACTERISTICS

ELEMENT	CD	CONSTRUCTION
Exterior Wall	31	VINYL SID 100
Roof Structur	03	GABLE/HIP 100
Roof Cover	14	PREFIN MT 100
Interior Wall	05	DRYWALL 100
Interior Floo	14	CARPET 90
Interior Floo	08	SHT VINYL 10
Air Condition	03	CENTRAL 100
Heating Type	04	AIR DUCTED 100
Bedrooms		3 100
Bathrooms		2 100
Frame	01	NONE 100
Stories	1.5	1.5 100
Architectual	05	CONV 100
Units		0 100
Condition Adj	03	03 100
Kitchen Adjus	01	01 100
Quality	05	05
DOR CODE	0100	SINGLE FAMILY
MAP NUM		MKT AREA 06
NEIGHBORHOOD/LOC	5417.0600	1.00/

AREA TYPE	TOTAL GROSS AREA	PCT OF BASE	YEAR	TOT ADJ AREA	SUBAREA MARKET VALUE
BAS	96	100		96	8,112
BAS	192	100		192	16,224
BAS	1,227	100		1,227	103,682
FCP	260	25		65	5,493
FEP	220	80		176	14,872
FOP	84	30		25	2,113
FUS	756	100		756	63,882
UST	91	45		41	3,465
TOTALS	2,926			2,578	217,841

MARKET ADJUSTMENTS

TYPE	MDL	EFF. AREA	TOT ADJ PTS	EFF. BASE RATE	REPL. COST NEW	AYB	EYB	ECON	FNCT		NORM	% COND
0100	01	2,578	116.0712	130.00	335,140	1960	1970	0	0	0	35.00	65.00

1 SINGLE FAM 100% - 0 Heated Area: 2271 HX Base Yr

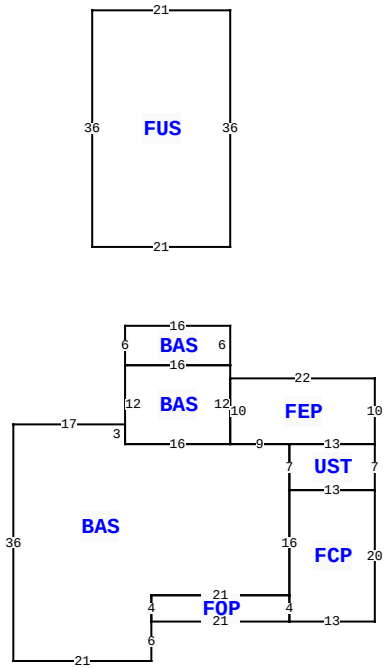

214 SE PINE DR, LAKE CITY

BLD DATE		LGL DATE	
XF DATE		LAND DATE	04/27/2022 MLU
INC DATE		AG DATE	

VALUATION SUMMARY

VALUATION BY		STANDARD
Tax Group: 1	Tax Dist:	
BUILDING MARKET VALUE		217,841
TOTAL MARKET OB/XF VALUE		1,600
TOTAL LAND VALUE - MARKET		11,050
TOTAL MARKET VALUE		230,491
SOH/AGL Deduction		122,008
ASSESSED VALUE		108,483
TOTAL EXEMPTION VALUE	HX HB WX	55,722
BASE TAXABLE VALUE		52,761
TOTAL JUST VALUE		230,491
NCON VALUE		0
INCOME VALUE		
PREVIOUS YEAR MKT VALUE		230,491

PERMIT NUM	DESCRIPTION	AMT	ISSUED
952	MAINT/ALTR	0	12/04/2017
1315	ADDN SFR	53	06/04/2009
234	ADDN SFR	50	07/06/2007

SALES DATA

OFF RECORD Number	DATE	TYPE INST	Q U	V I	RSN CD	SALE PRICE

BUILDING NOTES

BUILDING DIMENSIONS

BAS= W16 N3 W17 S36 E21 N6 FOP= E21 N4 W21 S4$ N4 E21 FCP= S4 E13 N20 W13 S16$ N16 UST= E13 N7W13 S7$ N7 FEP= E13 N10 W22 S10E9$ W9 BAS= N12 BAS= N6 W16 S6 E16$ W16 S12 E16$ PTR= N30 FUS= N36 W21 S36 E21$ S30$.

EXTRA FEATURES

LN	OB/XF CODE	DESCRIPTION	BLD	CAP	L	W	UNITS	UT	Adj R	ADJ UNIT PRICE	ORIG COND	YEAR ON	YEAR ACTUAL	Q	% COND	OB/XF MKT VALUE	NOTES
1	0166	CONC,PAVMT	0	100	0	0	1.00	UT	0.00	0.00	100	1993	1993	3	100	800	
2	0296	SHED METAL	0	100	10	10	100.00	UT	5.00	5.00	100	1919	1919	3	100	500	
3	0120	CLFENCE 4	0	100	0	0	1.00	UT	0.00	0.00	100	2012	2012	3	100	100	
4	0169	FENCE/WOOD	0	100	0	0	1.00	UT	0.00	0.00	100	2012	2012	3	100	200	

LAND DESCRIPTION

TOTAL OB/XF 1,600

LN	USE CODE	CLS	LAND USE DESCRIPTION	CAP	RD	LOC ZONE	FRONT	DEPTH	TOT LND UTS	UNIT TYPE	DT	DPTH FACT	% COND	TOT ADJ	UNIT PRICE	ADJ UNIT PRICE	LAND VALUE	OTHER ADJUSTMENTS AND NOTES	YEAR	DENSITY	DECL	FRZ	YR	CONSRV
1	0100	C	SFR	100		*RSF	-285.00	130.00	11,050.00	SF		1.00	1.00	1.00	1.00	1.00	11,050							

REVIEW DATE 10/04/2016 BY DF Total Acres: 0.25 Total Land Value: 11,050 Market: 0 Agricultural: 0 Common: 11,050 PRINTED 11/20/2025 BY SYS