LOTS 100, 101 & 102 UNIT 19 THRE ESTATES.

OLSEN DALE JEFFREY/OLSEN MICHELLE NICOLE
1188 SW NEWARK DR
FORT WHITE, FL 32038

2026

00-00-00-01220-000

COLUMBIA COUNTY PROPERTY

BUILDING CHARACTERISTICS

ELEMENT	CD	CONSTRUCTION
Exterior Wall	05	AVERAGE 100
Roof Structur	03	GABLE/HIP 100
Roof Cover	12	MODULAR MT 100
Interior Wall	05	DRYWALL 100
Interior Floo	06	VINYL ASB 50
Interior Floo	14	CARPET 50
Air Condition	03	CENTRAL 100
Heating Type	04	AIR DUCTED 100
Bedrooms		3 100
Bathrooms		2 100
Frame	01	NONE 100
Stories	1.5	1.5 100
Architectual	05	CONV 100
Units		0 100
Condition Adj	03	03 100
Kitchen Adjus	01	01 100
Quality	05	05
DOR CODE	0100	SINGLE FAMILY
MAP NUM		MKT AREA 02
NEIGHBORHOOD/LOC	100000.19	1.00/

AREA TYPE	TOTAL GROSS AREA	PCT OF BASE	YEAR	TOT ADJ AREA	SUBAREA MARKET VALUE
BAS	1,134	100		1,134	94,916
FUS	270	100		270	22,599
UDG	460	55		253	21,176
UDS	96	55		53	4,436
UOP	30	20		6	502
UOP	187	20		37	3,097
UOP	260	20		52	4,352
TOTALS	2,437			1,805	151,080

MARKET ADJUSTMENTS

TYPE	MDL	EFF. AREA	TOT ADJ PTS	EFF. BASE RATE	REPL. COST NEW	AYB	EYB	ECON	FNCT		NORM	% COND
0100	01	1,805	114.9750	128.77	232,430	1981	1981	0	0	0	35.00	65.00

1 SINGLE FAM 50% - 2025 Heated Area: 1404 HX Base Yr 2025

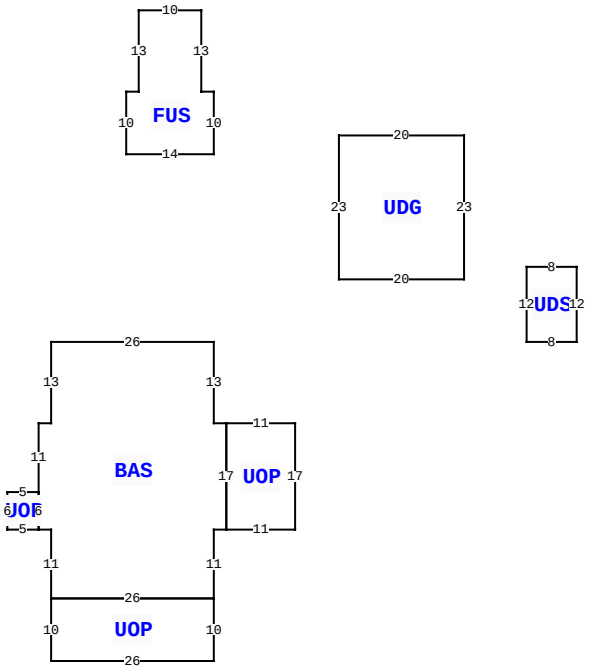

1188 SW NEWARK DR, FORT WHITE

BLD DATE		LGL DATE	
XF DATE		LAND DATE	04/30/2024 MLU
INC DATE		AG DATE	

VALUATION SUMMARY

VALUATION BY		STANDARD
Tax Group: 3	Tax Dist:	
BUILDING MARKET VALUE		151,080
TOTAL MARKET OB/XF VALUE		1,584
TOTAL LAND VALUE - MARKET		54,000
TOTAL MARKET VALUE		206,664
SOH/AGL Deduction		0
ASSESSED VALUE		206,664
TOTAL EXEMPTION VALUE	HA HAB	50,722
BASE TAXABLE VALUE		155,942
TOTAL JUST VALUE		206,664
NCON VALUE		0
INCOME VALUE		
PREVIOUS YEAR MKT VALUE		206,664

PERMIT NUM	DESCRIPTION	AMT	ISSUED

SALES DATA

OFF RECORD Number	DATE	TYPE INST	Q U	V I	RSN CD	SALE PRICE
1478/2380	11/04/2022	WD	Q	I	01	195,000
GRANTOR: STEPHENSON MICHAEL						
GRANTEE: OLSEN DALE JEFFREY						
1406/0769	1/28/2020	WD	U	I	30	100
GRANTOR: SHIRLEY M STEPHENSON						
GRANTEE: MICHAEL STEPHENSON						

BUILDING NOTES

BUILDING DIMENSIONS

BAS= W26 S13 W2 S11 UOP= W5S6 E5 N6$ S6 E2 S11 UOP= S10E26 N10 W26$ E26 N11 E2 UOP= E11 N17 W11 S17 $ N17 W2 N13$ PTR= N30 FUS= N10 W2 N13 W10S13 W2 S10 E14$ S30$ PTR= N10 E20 UDG= E20 N23 W20 S23$ S10 W20$ PTR= E50 UDS= E8 N12 W8 S12$ W50$.

EXTRA FEATURES

LN	OB/XF CODE	DESCRIPTION	BLD	CAP	L	W	UNITS	UT	Adj R	ADJ UNIT PRICE	ORIG COND	YEAR ON	YEAR ACTUAL	Q	% COND	OB/XF MKT VALUE	NOTES
1	0190	FPLC PF	0	50	0	0	1.00	UT	1,200.00	1,200.00	100	0	0	3	100	1,200	
2	0166	CONC,PAVMT	0	50	8	16	128.00	UT	3.00	3.00	100	2006	2006	3	100	384	

LAND DESCRIPTION

TOTAL OB/XF 1,584

LN	USE CODE	CLS	LAND USE DESCRIPTION	CAP	RD	LOC ZONE	FRONT	DEPTH	TOT LND UTS	UNIT TYPE	DT	DPTH FACT	% COND	TOT ADJ	UNIT PRICE	ADJ UNIT PRICE	LAND VALUE	OTHER ADJUSTMENTS AND NOTES	YEAR	DENSITY	DECL	FRZ	YR	CONSRV
1	0100	C	SFR	50		A-1	0.00	0.00	3.00	LT		1.00	1.00	0.90	20,000.00	18,000.00	54,000							

REVIEW DATE 02/07/2023 BY CP Total Acres: 2.75 Total Land Value: 54,000 Market: 0 Agricultural: 0 Common: 54,000 PRINTED 11/11/2025 BY SYS