LOT 29 UNIT 14 THREE RIVERS ESTA
677-367, 756-1782, 760-169, 920-

CAIN CALEB A
768 SW CALIFORNIA TER
FORT WHITE, FL 32038

2026

00-00-00-00908-029

BUILDING CHARACTERISTICS

ELEMENT	CD	CONSTRUCTION
Exterior Wall	31	VINYL SID 100
Roof Structur	03	GABLE/HIP 100
Roof Cover	03	COMP SHNGL 100
Interior Wall	05	DRYWALL 100
Interior Floo	13	LAM/VNLPLK 90
Interior Floo	08	SHT VINYL 10
Air Condition	03	CENTRAL 100
Heating Type	04	AIR DUCTED 100
Bedrooms		3 100
Bathrooms		2 100
Stories	1.	1. 100
Architectual	01	CONV 100
Units		0 100
Condition Adj	03	03 100
Kitchen Adjus	01	01 100
Quality	05	05
DOR CODE	0200	MOBILE HOME
MAP NUM		MKT AREA 02
NEIGHBORHOOD/LOC	100000.14	1.00/

AREA TYPE	TOTAL GROSS AREA	PCT OF BASE	YEAR	TOT ADJ AREA	SUBAREA MARKET VALUE
BAS	1,150	100		1,150	68,253
FCP	385	25		96	5,697
FSP	180	40		72	4,274
TOTALS	1,715			1,318	78,224

MARKET ADJUSTMENTS

TYPE	MDL	EFF. AREA	TOT ADJ PTS	EFF. BASE RATE	REPL. COST NEW	AYB	EYB	ECON	FNCT		NORM	% COND
0201	02	1,318	114.8000	107.91	142,225	1993	2000	0	0	0	45.00	55.00

1 MANUF 1 100% - 2019 Heated Area: 1150 HX Base Yr 2019

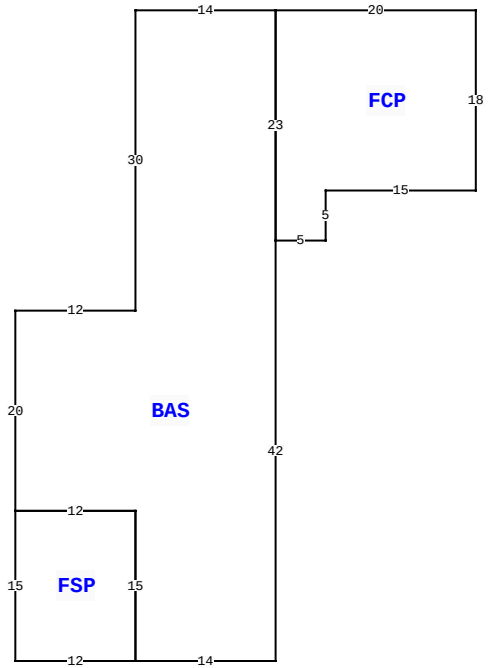

768 SW CALIFORNIA TER, FORT WHITE

BLD DATE		LGL DATE	
XF DATE		LAND DATE	04/30/2024 MLU
INC DATE		AG DATE	

COLUMBIA COUNTY PROPERTY

PAGE 1 of 1 3

VALUATION SUMMARY

VALUATION BY		STANDARD
Tax Group: 3	Tax Dist:	
BUILDING MARKET VALUE		78,224
TOTAL MARKET OB/XF VALUE		8,740
TOTAL LAND VALUE - MARKET		18,000
TOTAL MARKET VALUE		104,964
SOH/AGL Deduction		56,425
ASSESSED VALUE		48,539
TOTAL EXEMPTION VALUE	HX HB	25,000
BASE TAXABLE VALUE		23,539
TOTAL JUST VALUE		104,964
NCON VALUE		0
INCOME VALUE		
PREVIOUS YEAR MKT VALUE		104,964

SALE:3:1: LOT 29 UNIT 14 THREE RIVERS.

SALE:2:1: FORECLOSURE

LAND:1:1: LOT 29, UNIT 14, THREE RIVERS ESTATES

SALE:1:1: LOT 29, THREE RIVERS

PERMIT NUM	DESCRIPTION	AMT	ISSUED

SALES DATA

OFF RECORD Number	DATE	TYPE INST	Q U	V I	RSN CD	SALE PRICE
1358/2584	4/27/2018	WD	Q	I	01	49,000
GRANTOR: LARRY O & HOLLY C DAV						
GRANTEE: CALEB A CAIN						
1273/1889	4/29/2014	WD	Q	I	01	46,500
GRANTOR: DONNA L EVERETT						
GRANTEE: LARRY O & HOLLY C D						

BUILDING NOTES

BUILDING DIMENSIONS

BAS= W14 S30 W12 S20 FSP= S15 E12 N15 W12$ E12 S15 E14 N42
FCP= E5 N5 E15 N18 W20 S23$ N23$.

EXTRA FEATURES

LN	OB/XF CODE	DESCRIPTION	BLD	CAP	L	W	UNITS	UT	Adj R	ADJ UNIT PRICE	ORIG COND	YEAR ON	YEAR ACTUAL	Q	% COND	OB/XF MKT VALUE	NOTES
1	0294	SHED WOOD/	0	100	12	20	240.00	UT	12.00	12.00	50	2006	2006	3	50	1,440	
2	0169	FENCE/WOOD	0	100	0	0	1.00	UT	0.00	0.00	100	2015	2015	3	100	300	
3	9945	Well/Sept	0	100	0	0	1.00	UT	7,000.00	7,000.00	100			3	100	7,000	

LAND DESCRIPTION

TOTAL OB/XF 8,740

LN	USE CODE	CLS	LAND USE DESCRIPTION	CAP	RD	LOC ZONE	FRONT	DEPTH	TOT LND UTS	UNIT TYPE	DT	DPTH FACT	% COND	TOT ADJ	UNIT PRICE	ADJ UNIT PRICE	LAND VALUE	OTHER ADJUSTMENTS AND NOTES	YEAR	DENSITY	DECL	FRZ	YR	CONSRV
1	0200	C	MBL HM	100		A-1	81.00	0.00	1.00	LT		1.00	1.00	1.00	18,000.00	18,000.00	18,000							

REVIEW DATE 02/09/2016 BY DF Total Acres: 0.91 Total Land Value: 18,000 Market: 0 Agricultural: 0 Common: 18,000 PRINTED 09/10/2025 BY SYS