LOT 83 UNIT 12 THREE RIVERS ESTA
767-1846, QC 1128-1461, WD 1199-

STRANICK JOHN T/GLASER KAREN G
P O BOX 632
FORT WHITE, FL 32038

2025

00-00-00-00894-004

COLUMBIA COUNTY PROPERTY

BUILDING CHARACTERISTICS

ELEMENT	CD	CONSTRUCTION
Exterior Wall	10	ABOVE AVG. 100
Roof Structur	03	GABLE/HIP 100
Roof Cover	12	MODULAR MT 100
Interior Wall	05	DRYWALL 80
Interior Wall	06	CUST PANEL 20
Interior Floo	14	CARPET 50
Interior Floo	15	HARDTILE 50
Air Condition	03	CENTRAL 100
Heating Type	04	AIR DUCTED 100
Bedrooms		3 100
Bathrooms		2 100
Frame	01	NONE 100
Stories	2.	2. 100
Architectual	05	CONV 100
Units		0 100
Condition Adj	03	03 100
Kitchen Adjus	01	01 100
Quality	06	06

DOR CODE	0100	SINGLE FAMILY	
MAP NUM		MKT AREA	02
NEIGHBORHOOD/LOC	100000.12	1.00/	

AREA TYPE	TOTAL GROSS AREA	PCT OF BASE	YEAR	TOT ADJ AREA	SUBAREA MARKET VALUE
BAS	1,050	100		1,050	99,850
FEP	234	80		187	17,783
FGR	624	55		343	32,618
FUS	711	100		711	67,612
UDC	540	25		135	12,838
UDU	80	55		44	4,184
UOP	36	20		7	666
USP	160	35		56	5,325
TOTALS	3,435			2,533	240,876

MARKET ADJUSTMENTS

TYPE	MDL	EFF. AREA	TOT ADJ PTS	EFF. BASE RATE	REPL. COST NEW	AYB	EYB	ECON	FNCT		NORM	% COND
0100	01	2,533	130.6264	146.30	370,578	1982	1982	0	0	0	35.00	65.00

1 SINGLE FAM 0% - 0 Heated Area: 1761 HX Base Yr

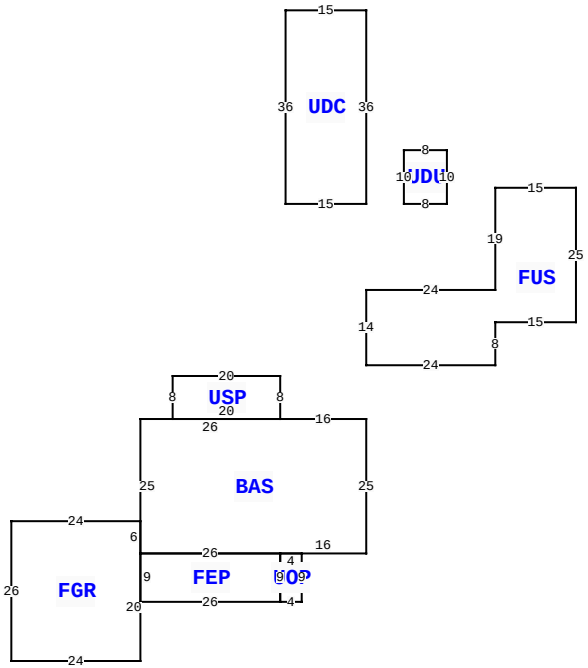

309 SW SANTA FE DR, FORT WHITE

BLD DATE		LGL DATE	
XF DATE		LAND DATE	04/30/2024 MLU
INC DATE		AG DATE	

VALUATION SUMMARY

VALUATION BY	STANDARD
Tax Group: 3	Tax Dist:
BUILDING MARKET VALUE	240,876
TOTAL MARKET OB/XF VALUE	3,500
TOTAL LAND VALUE - MARKET	18,000
TOTAL MARKET VALUE	262,376
SOH/AGL Deduction	16,744
ASSESSED VALUE	245,632
TOTAL EXEMPTION VALUE	0
BASE TAXABLE VALUE	245,632
TOTAL JUST VALUE	262,376
NCON VALUE	0
INCOME VALUE	
PREVIOUS YEAR MKT VALUE	247,327

PERMIT NUM	DESCRIPTION	AMT	ISSUED
31848	MAINT/ALTR	50	03/28/2014

SALES DATA

OFF RECORD Number	DATE	TYPE INST	Q U	V I	RSN CD	SALE PRICE
1372/1703	10/29/2018	LE	U	I	14	100
GRANTOR: JOHN T STRANICK & KAR						
GRANTEE: JOHN T STRANICK & K						
1199/2569	8/20/2010	WD	Q	I	01	160,000
GRANTOR: JOHN C MILLS AS TRUST						
GRANTEE: JOHN T STRANICK & K						

BUILDING NOTES

BUILDING DIMENSIONS

BAS=[ORIG=0,0] W16 W26 S25 E26 E16 N25 $
FUS=[ORIG=0,-10] E24 N8 E15 N25 W15 S19 W24 S14 $
FGR=[ORIG=-42,25] N6 W24 S26 E24 N20 $
UDC=[ORIG=0,-40] N36 W15 S36 E15 $
FEP=[ORIG=-42,25] S9 E26 N9 W26 $
USP=[ORIG=-16,0] N8 W20 S8 E20 $
UDU=[ORIG=15,-40] N10 W8 S10 E8 $
UOP=[ORIG=-16,25] S9 E4 N9 W4 $
.

EXTRA FEATURES

LN	OB/XF CODE	DESCRIPTION	BLD	CAP	L	W	UNITS	UT	Adj R	ADJ UNIT PRICE	ORIG COND	YEAR ON	YEAR ACTUAL	Q	% COND	OB/XF MKT VALUE	NOTES
1	0180	FPLC 1STRY	0	0	0	0	1.00	UT	2,000.00	2,000.00	100	0	0	3	100	2,000	
2	0070	CARPORT UF	0	0	0	0	1.00	UT	0.00	0.00	100	2006	2006	3	100	1,500	

LAND DESCRIPTION

TOTAL OB/XF 3,500

LN	USE CODE	CLS	LAND USE DESCRIPTION	CAP	RD	LOC ZONE	FRONT	DEPTH	TOT LND UTS	UNIT TYPE	DT	DPTH FACT	% COND	TOT ADJ	UNIT PRICE	ADJ UNIT PRICE	LAND VALUE	OTHER ADJUSTMENTS AND NOTES	YEAR	DENSITY	DECL	FRZ	YR	CONSRV
1	0100	C	SFR	0		00	0.00	0.00	1.00	LT		1.00	1.00	1.00	18,000.00	18,000.00	18,000							

REVIEW DATE 05/19/2016 BY TW Total Acres: 0.81 Total Land Value: 18,000 Market: 0 Agricultural: 0 Common: 18,000 PRINTED 09/05/2025 BY SYS