LOTS 81 & 82 UNIT 12 THREE RIVER
634-568,

OSTEEN BRYN JACKSON/OSTEEN DORIS
247 SW SANTA FE DR
FORT WHITE, FL 32038

2025

00-00-00-00894-003

COLUMBIA COUNTY PROPERTY

BUILDING CHARACTERISTICS

ELEMENT	CD	CONSTRUCTION
Exterior Wall	32	HARDIE BRD 100
Roof Structur	03	GABLE/HIP 100
Roof Cover	03	COMP SHNGL 100
Interior Wall	05	DRYWALL 100
Interior Floo	14	CARPET 90
Interior Floo	06	VINYL ASB 10
Air Condition	03	CENTRAL 100
Heating Type	04	AIR DUCTED 100
Bedrooms		3 100
Bathrooms		1 100
Frame	01	NONE 100
Stories	1.5	1.5 100
Architectual	05	CONV 100
Units		0 100
Condition Adj	03	03 100
Kitchen Adjus	01	01 100
Quality	05	05
DOR CODE	0100	SINGLE FAMILY
MAP NUM		MKT AREA 02
NEIGHBORHOOD/LOC	100000.12	1.00/

AREA TYPE	TOTAL GROSS AREA	PCT OF BASE	YEAR	TOT ADJ AREA	SUBAREA MARKET VALUE
BAS	1,248	100		1,248	98,634
FSP	224	40		90	7,113
FUS	336	100		336	26,555
UCP	864	20		173	13,673
UDG	224	55		123	9,721
TOTALS	2,896			1,970	155,696

MARKET ADJUSTMENTS

TYPE	MDL	EFF. AREA	TOT ADJ PTS	EFF. BASE RATE	REPL. COST NEW	AYB	EYB	ECON	FNCT		NORM	% COND
0100	01	1,970	108.5595	121.59	239,532	1983	1983	0	0	0	35.00	65.00

1 SINGLE FAM 100% - 0 Heated Area: 1584 HX Base Yr

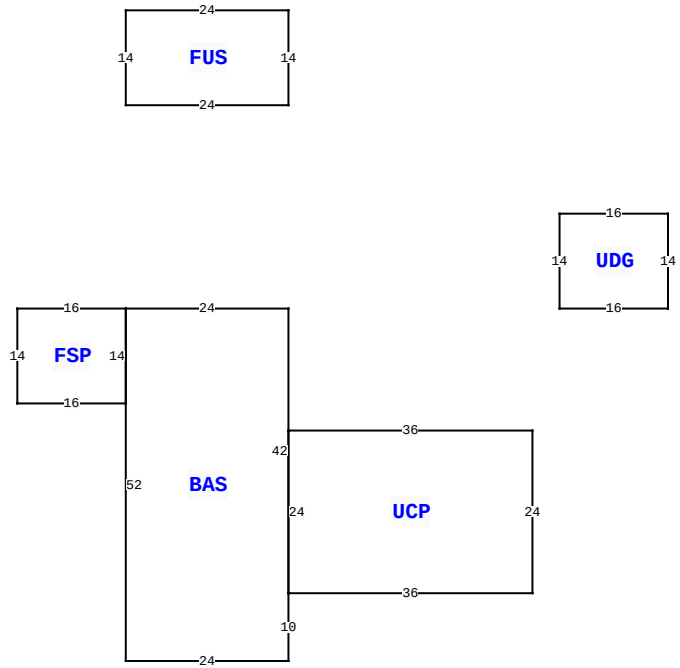

247 SW SANTA FE DR, FORT WHITE

BLD DATE		LGL DATE	
XF DATE		LAND DATE	04/30/2024 MLU
INC DATE		AG DATE	

VALUATION SUMMARY

VALUATION BY		STANDARD
Tax Group: 3	Tax Dist:	
BUILDING MARKET VALUE		155,696
TOTAL MARKET OB/XF VALUE		5,190
TOTAL LAND VALUE - MARKET		36,000
TOTAL MARKET VALUE		196,886
SOH/AGL Deduction		106,017
ASSESSED VALUE		90,869
TOTAL EXEMPTION VALUE	HX HB	50,722
BASE TAXABLE VALUE		40,147
TOTAL JUST VALUE		196,886
NCON VALUE		0
INCOME VALUE		
PREVIOUS YEAR MKT VALUE		187,154

PERMIT NUM	DESCRIPTION	AMT	ISSUED
000046362	Roof Replacement	16,128	01/25/2023

SALES DATA

OFF RECORD Number	DATE	TYPE INST	Q U	V I	RSN CD	SALE PRICE
0634/0568	9/29/1987	WD	Q	V		8,500
GRANTOR: CHARLES J MILLER						
GRANTEE: OSTEEN BRYN J						
0592/0295	5/01/1986	WD	Q	I	01	3,700
GRANTOR:						
GRANTEE:						

BUILDING NOTES

BUILDING DIMENSIONS

BAS=[ORIG=0,0] W24 S52 E24 N10 N42 $
UCP=[ORIG=0,42] E36 N24 W36 S24 $
FUS=[ORIG=0,-30] N14 W24 S14 E24 $
FSP=[ORIG=-24,0] W16 S14 E16 N14 $
UDG=[ORIG=40,0] E16 N14 W16 S14 $
.

EXTRA FEATURES

LN	OB/XF CODE	DESCRIPTION	BLD	CAP	L	W	UNITS	UT	Adj R	ADJ UNIT PRICE	ORIG COND	YEAR ON	YEAR ACTUAL	Q	% COND	OB/XF MKT VALUE	NOTES
1	0040	BARN,POLE	0	100	25	32	800.00	UT	2.50	2.50	100	1993	1993	3	100	2,000	
2	0252	LEAN-TO W/	0	100	24	6	144.00	UT	2.50	2.50	100	2007	2007	3	100	360	
3	0070	CARPORT UF	0	100	18	30	540.00	UT	2.50	2.50	100	2007	2007	3	100	1,350	
4	0080	DECKING	0	100	0	0	144.00	UT	7.50	7.50	100	2007	2007	3	100	1,080	
5	0294	SHED WOOD/	0	100	0	0	1.00	UT	0.00	0.00	100	2015	2015	3	100	400	

LAND DESCRIPTION

TOTAL OB/XF 5,190

LN	USE CODE	CLS	LAND USE DESCRIPTION	CAP	RD	LOC ZONE	FRONT	DEPTH	TOT LND UTS	UNIT TYPE	DT	DPTH FACT	% COND	TOT ADJ	UNIT PRICE	ADJ UNIT PRICE	LAND VALUE	OTHER ADJUSTMENTS AND NOTES	YEAR	DENSITY	DECL	FRZ	YR	CONSRV
1	0100	C	SFR	100		00	0.00	0.00	2.00	LT		1.00	1.00	1.00	18,000.00	18,000.00	36,000							

REVIEW DATE 02/06/2023 BY JS Total Acres: 1.82 Total Land Value: 36,000 Market: 0 Agricultural: 0 Common: 36,000 PRINTED 09/05/2025 BY SYS