LOT 75 SEC 11 THREE RIVERS ESTAT
297-642, 945-2469, WD 1181-1668,

RAMLOW BRADLEY VINCENT/HAMMIS ZOE JOSEPHINE
362 SW WASHINGTON AVE
FORT WHITE, FL 32038

2026

00-00-00-00862-000

COLUMBIA COUNTY PROPERTY

BUILDING CHARACTERISTICS

ELEMENT	CD	CONSTRUCTION
Exterior Wall	05	AVERAGE 100
Roof Structur	08	IRREGULAR 100
Roof Cover	12	MODULAR MT 100
Interior Wall	05	DRYWALL 100
Interior Floo	12	HARDWOOD 80
Interior Floo	11	CLAY TILE 20
Air Condition	03	CENTRAL 100
Heating Type	04	AIR DUCTED 100
Bedrooms		2 100
Bathrooms		2 100
Frame	01	NONE 100
Stories	1.	1. 100
Architectual	05	CONV 100
Units		0 100
Condition Adj	03	03 100
Kitchen Adjus	01	01 100
Quality	05	05
DOR CODE	0100	SINGLE FAMILY
MAP NUM		MKT AREA 02
NEIGHBORHOOD/LOC	100000.11	1.00/

AREA TYPE	TOTAL GROSS AREA	PCT OF BASE	YEAR	TOT ADJ AREA	SUBAREA MARKET VALUE
BAS	100	100		100	9,282
BAS	110	100		110	10,210
BAS	748	100		748	69,429
FSP	180	40		72	6,683
UCP	176	20		35	3,249
UOP	72	20		14	1,299
UOP	90	20		18	1,671
UOP	96	20		19	1,763
UOP	128	20		26	2,413
USP	100	35		35	3,249
TOTALS	2,312			1,407	130,598

MARKET ADJUSTMENTS

TYPE	MDL	EFF. AREA	TOT ADJ PTS	EFF. BASE RATE	REPL. COST NEW	AYB	EYB	ECON	FNCT		NORM	% COND
0100	01	1,407	127.5040	142.80	200,920	1960	1990	0	0	0	35.00	65.00

1 SINGLE FAM 100% - 2021 Heated Area: 958 HX Base Yr 2021

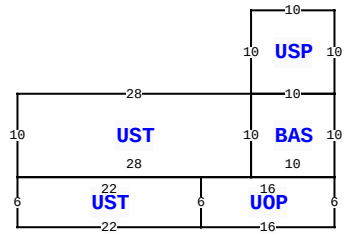

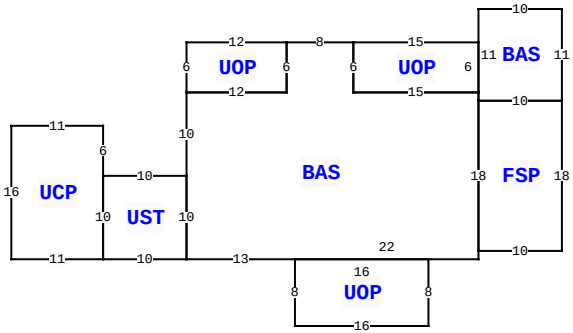

** This building has 13 Sub-Areas

362 SW WASHINGTON AVE, FORT WHITE

BLD DATE		LGL DATE	
XF DATE		LAND DATE	04/30/2024 MLU
INC DATE		AG DATE	

VALUATION SUMMARY

VALUATION BY		STANDARD
Tax Group: 3	Tax Dist:	
BUILDING MARKET VALUE		130,598
TOTAL MARKET OB/XF VALUE		4,754
TOTAL LAND VALUE - MARKET		20,000
TOTAL MARKET VALUE		155,352
SOH/AGL Deduction		39,902
ASSESSED VALUE		115,450
TOTAL EXEMPTION VALUE	HX HB	50,722
BASE TAXABLE VALUE		64,728
TOTAL JUST VALUE		155,352
NCON VALUE		0
INCOME VALUE		
PREVIOUS YEAR MKT VALUE		155,352

PERMIT NUM	DESCRIPTION	AMT	ISSUED

SALES DATA

OFF RECORD Number	DATE	TYPE INST	Q U	V I	RSN CD	SALE PRICE
1404/2436	1/31/2020	WD	Q	I	01	105,000
GRANTOR: LIN P & JULIE D DAILE						
GRANTEE: BRADLEY V RAMLOW &						
1181/1668	9/28/2009	WD	Q	I	01	91,000
GRANTOR: RICHARD JORDAN						
GRANTEE: LIN P & JULIE D DAI						

BUILDING NOTES

EXTRA FEATURES

LN	OB/XF CODE	DESCRIPTION	BLD	CAP	L	W	UNITS	UT	Adj R	ADJ UNIT PRICE	ORIG COND	YEAR ON	YEAR ACTUAL	Q	% COND	OB/XF MKT VALUE	NOTES
1	0282	POOL ENCL	0	100	18	38	684.00	UT	15.00	15.00	100	2006	2006	3	40	4,104	
2	0070	CARPORT UF	0	100	18	20	360.00	UT	2.50	2.50	50	2006	2006	3	50	450	
3	0080	DECKING	0	100	0	0	1.00	UT	0.00	0.00	100	2015	2015	3	100	200	

BUILDING DIMENSIONS

BAS=[ORIG=0,0] W15 N6 W8 S6 W12 S10 S10 E13 E22 N1 N18 N1 $
UST=[ORIG=-10,-30] N10 W28 S10 E28 $
FSP=[ORIG=0,19] E10 N18 W10 S18 $
UCP=[ORIG=-45,10] N6 W11 S16 E11 N10 $
UST=[ORIG=-38,-30] S6 E22 N6 W22 $
UOP=[ORIG=-22,20] S8 E16 N8 W16 $
BAS=[ORIG=0,1] E10 N11 W10 S11 $
UST=[ORIG=-35,10] W10 S10 E10 N10 $
BAS=[ORIG=0,-30] N10 W10 S10 E10 $
USP=[ORIG=0,-40] N10 W10 S10 E10 $
UOP=[ORIG=-16,-24] E16 N6 W16 S6 $
UOP=[ORIG=0,0] N6 W15 S6 E15 $

LAND DESCRIPTION

TOTAL OB/XF 4,754

LN	USE CODE	CLS	LAND USE DESCRIPTION	CAP	RD	LOC ZONE	FRONT	DEPTH	TOT LND UTS	UNIT TYPE	DT	DPTH FACT	% COND	TOT ADJ	UNIT PRICE	ADJ UNIT PRICE	LAND VALUE	OTHER ADJUSTMENTS AND NOTES	YEAR	DENSITY	DECL	FRZ	YR	CONSRV
1	0100	C	SFR	100		A-1	0.00	0.00	1.00	LT		1.00	1.00	1.00	20,000.00	20,000.00	20,000							

REVIEW DATE 05/26/2020 BY BC Total Acres: 0.90 Total Land Value: 20,000 Market: 0 Agricultural: 0 Common: 20,000 PRINTED 11/28/2025 BY SYS