LOT 55 UNIT 11 THREE RIVERS ESTA
615-601, 766-952, WD 1075-2642,

DUKES ERIC A/DUKES THEDAS A
290 SE ORMOND WITT RD
LAKE CITY, FL 32025

2026

00-00-00-00858-005

COLUMBIA COUNTY PROPERTY

BUILDING CHARACTERISTICS

ELEMENT	CD	CONSTRUCTION
Exterior Wall	31	VINYL SID 100
Roof Structur	03	GABLE/HIP 100
Roof Cover	12	MODULAR MT 100
Interior Wall	05	DRYWALL 100
Interior Floo	14	CARPET 80
Interior Floo	13	LAM/VNLPLK 20
Air Condition	03	CENTRAL 100
Heating Type	04	AIR DUCTED 100
Bedrooms		3 100
Bathrooms		2 100
Frame	01	NONE 100
Stories	1.	1. 100
Architectual	05	CONV 100
Units		0 100
Condition Adj	03	03 100
Kitchen Adjus	01	01 100
Quality	05	05
DOR CODE	0100	SINGLE FAMILY
MAP NUM		MKT AREA 02
NEIGHBORHOOD/LOC	100000.11	1.00/

AREA TYPE	TOTAL GROSS AREA	PCT OF BASE	YEAR	TOT ADJ AREA	SUBAREA MARKET VALUE
BAS	1,564	100		1,564	131,062
FSP	192	40		77	6,453
UDG	576	55		317	26,564
UOP	30	20		6	503
TOTALS	2,362			1,964	164,582

MARKET ADJUSTMENTS

TYPE	MDL	EFF. AREA	TOT ADJ PTS	EFF. BASE RATE	REPL. COST NEW	AYB	EYB	ECON	FNCT		NORM	% COND
0100	01	1,964	108.8340	121.89	239,392	1950	2000	0	0	0	31.25	68.75

1 SINGLE FAM 100% - 2021 Heated Area: 1564 HX Base Yr 2021

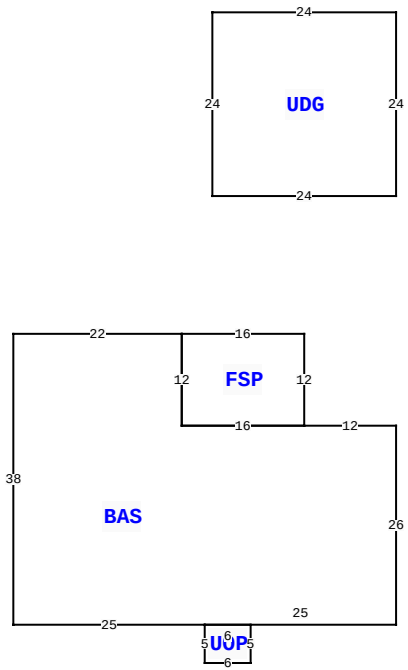

696 SW WASHINGTON AVE, FORT WHITE

BLD DATE		LGL DATE	
XF DATE		LAND DATE	04/30/2024 MLU
INC DATE		AG DATE	

VALUATION SUMMARY

VALUATION BY		STANDARD
Tax Group: 3	Tax Dist:	
BUILDING MARKET VALUE		164,582
TOTAL MARKET OB/XF VALUE		2,932
TOTAL LAND VALUE - MARKET		20,000
TOTAL MARKET VALUE		187,514
SOH/AGL Deduction		37,947
ASSESSED VALUE		149,567
TOTAL EXEMPTION VALUE	HX HB	50,722
BASE TAXABLE VALUE		98,845
TOTAL JUST VALUE		187,514
NCON VALUE		0
INCOME VALUE		
PREVIOUS YEAR MKT VALUE		190,506

PERMIT NUM	DESCRIPTION	AMT	ISSUED

SALES DATA

OFF RECORD Number	DATE	TYPE INST	Q / U	V / I	RSN CD	SALE PRICE
1543/117	6/19/2025	LE	U	I	14	100
GRANTOR: DUKES ERIC A						
GRANTEE: DUKES ERIC A (ENH L						
1541/969	5/29/2025	WD	Q	I	01	245,000
GRANTOR: BURT CHARLES						
GRANTEE: DUKES ERIC A						

BUILDING NOTES

BUILDING DIMENSIONS

BAS=[ORIG=0,0] W12 W16 N12 W22 S38 E25 E25 N26 $
UDG=[ORIG=0,-30] N24 W24 S24 E24 $
FSP=[ORIG=-12,0] N12 W16 S12 E16 $
UOP=[ORIG=-25,26] S5 E6 N5 W6 $
.

EXTRA FEATURES

LN	OB/XF CODE	DESCRIPTION	BLD	CAP	L	W	UNITS	UT	Adj R	ADJ UNIT PRICE	ORIG COND	YEAR ON	YEAR ACTUAL	Q	% COND	OB/XF MKT VALUE	NOTES
1	0190	FPLC PF	0	100	0	0	1.00	UT	1,200.00	1,200.00	100	0	0	3	100	1,200	
2	0166	CONC,PAVMT	0	100	12	24	288.00	UT	1.50	1.50	100	1993	1993	3	100	432	
3	0120	CLFENCE 4	0	100	0	0	1.00	UT	0.00	0.00	100	1993	1993	3	100	300	
4	0080	DECKING	0	100	0	0	1.00	UT	0.00	0.00	100	2017	2017	3	100	1,000	

LAND DESCRIPTION

TOTAL OB/XF 2,932

LN	USE CODE	CLS	LAND USE DESCRIPTION	CAP	RD	LOC ZONE	FRONT	DEPTH	TOT LND UTS	UNIT TYPE	DT	DPTH FACT	% COND	TOT ADJ	UNIT PRICE	ADJ UNIT PRICE	LAND VALUE	OTHER ADJUSTMENTS AND NOTES	YEAR	DENSITY	DECL	FRZ	YR	CONSRV
1	0100	C	SFR	100		A-1	0.00	0.00	1.00	LT		1.00	1.00	1.00	20,000.00	20,000.00	20,000							

REVIEW DATE 07/01/2025 BY TP Total Acres: 0.87 Total Land Value: 20,000 Market: 0 Agricultural: 0 Common: 20,000 PRINTED 11/28/2025 BY SYS