LOT 15 UNIT 6 THREE RIVERS ESTAT
805-2391, 803-208, WD 1022-2703,

DAVIS JAY S
P O BOX 1508
LAKE CITY, FL 32056

2026

00-00-00-00641-015

BUILDING CHARACTERISTICS

ELEMENT	CD	CONSTRUCTION
Exterior Wall	12	CEDAR 100
Roof Structur	03	GABLE/HIP 100
Roof Cover	14	PREFIN MT 100
Interior Wall	05	DRYWALL 100
Interior Floo	12	HARDWOOD 100
Air Condition	03	CENTRAL 100
Heating Type	04	AIR DUCTED 100
Bedrooms		3 100
Bathrooms		2 100
Frame	01	NONE 100
Stories	2.	2. 100
Architectual	05	CONV 100
Units		0 100
Condition Adj	03	03 100
Kitchen Adjus	01	01 100
Quality	07	07
DOR CODE	0100	SINGLE FAMILY
MAP NUM		MKT AREA 02
NEIGHBORHOOD/LOC	100000.06	1.00/

AREA TYPE	TOTAL GROSS AREA	PCT OF BASE	YEAR	TOT ADJ AREA	SUBAREA MARKET VALUE
BAS	273	100		273	36,275
BAS	960	100		960	127,562
FOP	284	30		85	11,294
UCP	647	20		129	17,141
UOP	264	20		53	7,043
UOP	308	20		62	8,239
UST	80	45		36	4,784
TOTALS	2,816			1,598	212,338

MARKET ADJUSTMENTS

TYPE	MDL	EFF. AREA	TOT ADJ PTS	EFF. BASE RATE	REPL. COST NEW	AYB	EYB	ECON	FNCT		NORM	% COND
0300	01	1,598	145.2182	177.17	283,118	1989	2000	0	0	0	25.00	75.00

1 SFR PILING 0% - 0 Heated Area: 1233 HX Base Yr

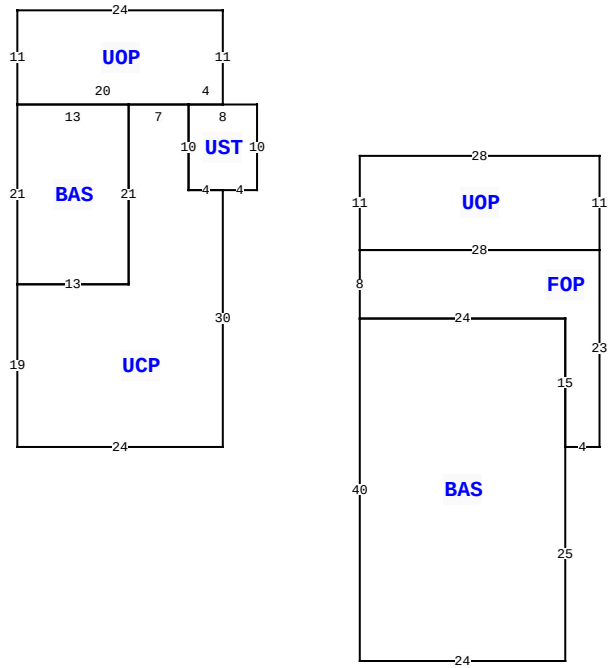

1562 SW SANTA FE DR, FORT WHITE

BLD DATE		LGL DATE	
XF DATE		LAND DATE	05/13/2025 MLU
INC DATE		AG DATE	

COLUMBIA COUNTY PROPERTY

PAGE 1 of 1 3

VALUATION SUMMARY

VALUATION BY	STANDARD
Tax Group: 3	Tax Dist:
BUILDING MARKET VALUE	212,338
TOTAL MARKET OB/XF VALUE	13,408
TOTAL LAND VALUE - MARKET	84,000
TOTAL MARKET VALUE	309,746
SOH/AGL Deduction	0
ASSESSED VALUE	309,746
TOTAL EXEMPTION VALUE	0
BASE TAXABLE VALUE	309,746
TOTAL JUST VALUE	309,746
NCON VALUE	0
INCOME VALUE	
PREVIOUS YEAR MKT VALUE	312,578

SALE:2:1: WD REPLACING AGREEMENT

SALE:1:1: SALE NOT IN LINE

PRMT:1:1: PERMIT FOR COMPLETION OF HOUSE

PERMIT NUM	DESCRIPTION	AMT	ISSUED
10122	SFR	100	08/24/1995

SALES DATA

OFF RECORD Number	DATE	TYPE INST	Q U	V I	RSN CD	SALE PRICE
1069/1243	12/06/2005	WD	U	I	09	280,000
GRANTOR: O'QUINN						
GRANTEE: DAVIS, JAY						
1022/2703	7/30/2004	WD	U	I	09	197,000
GRANTOR: STANKIEWICZ						
GRANTEE: VAN R O'QUINN						

BUILDING NOTES

BUILDING DIMENSIONS

BAS=[ORIG=0,0] N15 W24 S40 E24 N25 $
UCP=[ORIG=-40,0] N30 W4 N10 W7 S21 W13 S19 E24 $
UOP=[ORIG=4,-23] N11 W28 S11 E28 $
FOP=[ORIG=0,0] E4 N23 W28 S8 E24 S15 $
BAS=[ORIG=-51,-40] W13 S21 E13 N21 $
UOP=[ORIG=-44,-40] E4 N11 W24 S11 E20 $
UST=[ORIG=-40,-30] E4 N10 W8 S10 E4 $
.

EXTRA FEATURES

LN	OB/XF CODE	DESCRIPTION	BLD	CAP	L	W	UNITS	UT	Adj R	ADJ UNIT PRICE	ORIG COND	YEAR ON	YEAR ACTUAL	Q	% COND	OB/XF MKT VALUE	NOTES
1	0296	SHED METAL	0	0	12	24	288.00	UT	12.00	12.00	100	2006	2006	3	100	3,456	
2	0084	DOCK-RIVER	0	0	0	0	796.00	UT	14.50	14.50	100	2006	2006	3	40	4,617	
3	0190	FPLC PF	0	0	0	0	1.00	UT	1,200.00	1,200.00	100	2006	2006	3	100	1,200	
4	0080	DECKING	0	0	0	0	1.00	UT	0.00	0.00	100	2015	2015	3	100	100	
5	0169	FENCE/WOOD	0	0	0	0	1.00	UT	0.00	0.00	100	2015	2015	3	100	600	
6	0166	CONC,PAVMT	0	0	0	0	687.00	UT	5.00	5.00	100	2015	2015	3	100	3,435	

LAND DESCRIPTION

TOTAL OB/XF 13,408

LN	USE CODE	CLS	LAND USE DESCRIPTION	CAP	RD	LOC ZONE	FRONT	DEPTH	TOT LND UTS	UNIT TYPE	DT	DPTH FACT	% COND	TOT ADJ	UNIT PRICE	ADJ UNIT PRICE	LAND VALUE	OTHER ADJUSTMENTS AND NOTES	YEAR	DENSITY	DECL	FRZ	YR	CONSRV
1	0100	C	SFR	0		A-1	0.00	0.00	64.00	FF		1.00	1.00	1.75	750.00	1,312.50	84,000							

REVIEW DATE 02/25/2016 BY DF Total Acres: 0.46 Total Land Value: 84,000 Market: 0 Agricultural: 0 Common: 84,000 PRINTED 11/26/2025 BY SYS