LOT 1 UNIT 1-A THREE RIVERS ESTA
500-390, WD 1068-443,

KOHN MARY LOU/JAMES L KOHN CO-TRUSTEES
1178 SW RIVERSDALE AVE
FORT WHITE, FL 32038

2026

00-00-00-00568-001

COLUMBIA COUNTY PROPERTY

BUILDING CHARACTERISTICS

ELEMENT	CD	CONSTRUCTION
Exterior Wall	05	AVERAGE 100
Roof Structur	03	GABLE/HIP 100
Roof Cover	12	MODULAR MT 100
Interior Wall	05	DRYWALL 100
Interior Floo	14	CARPET 90
Interior Floo	06	VINYL ASB 10
Air Condition	03	CENTRAL 100
Heating Type	04	AIR DUCTED 100
Bedrooms		3 100
Bathrooms		2 100
Frame	01	NONE 100
Stories	1.5	1.5 100
Architectual	05	CONV 100
Units		0 100
Condition Adj	03	03 100
Kitchen Adjus	01	01 100
Quality	05	05
DOR CODE	0100	SINGLE FAMILY
MAP NUM		MKT AREA 02
NEIGHBORHOOD/LOC	100000.01	1.00/

AREA TYPE	TOTAL GROSS AREA	PCT OF BASE	YEAR	TOT ADJ AREA	SUBAREA MARKET VALUE
BAS	1,255	100		1,255	106,007
FUS	320	100		320	27,030
UOP	56	20		11	929
UOP	156	20		31	2,618
UOP	336	20		67	5,660
UST	102	45		46	3,886
TOTALS	2,225			1,730	146,129

MARKET ADJUSTMENTS

TYPE	MDL	EFF. AREA	TOT ADJ PTS	EFF. BASE RATE	REPL. COST NEW	AYB	EYB	ECON	FNCT		NORM	% COND
0100	01	1,730	116.0250	129.95	224,814	1973	1973	0	0	0	35.00	65.00

1 SINGLE FAM 100% - 0 Heated Area: 1575 HX Base Yr

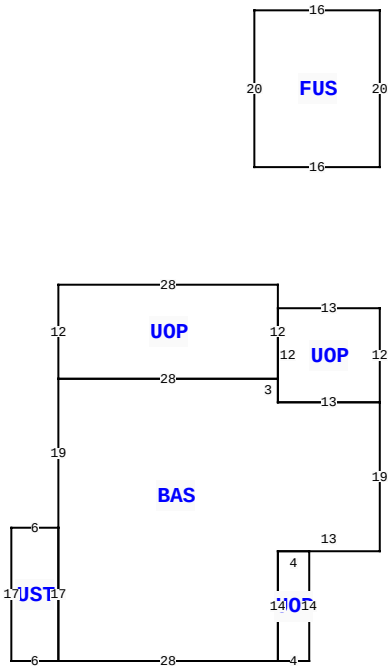

1178 SW RIVERSIDE AVE, FORT WHITE

BLD DATE		LGL DATE	
XF DATE		LAND DATE	
INC DATE		AG DATE	

VALUATION SUMMARY

VALUATION BY		STANDARD
Tax Group: 3	Tax Dist:	
BUILDING MARKET VALUE		146,129
TOTAL MARKET OB/XF VALUE		7,000
TOTAL LAND VALUE - MARKET		90,000
TOTAL MARKET VALUE		243,129
SOH/AGL Deduction		104,996
ASSESSED VALUE		138,133
TOTAL EXEMPTION VALUE	HX HB	50,722
BASE TAXABLE VALUE		87,411
TOTAL JUST VALUE		243,129
NCON VALUE		0
INCOME VALUE		
PREVIOUS YEAR MKT VALUE		243,429

PERMIT NUM	DESCRIPTION	AMT	ISSUED
000046098	Electrical Servic	0	12/14/2022

SALES DATA

OFF RECORD Number	DATE	TYPE INST	Q U /	V I /	RSN CD	SALE PRICE
1068/0443	12/09/2005	WD	Q	I	01	100

GRANTOR: JAMES L KOHN
GRANTEE: MARY LOU & JAMES KO

EXTRA FEATURES

LN	OB/XF CODE	DESCRIPTION	BLD	CAP	L	W	UNITS	UT	Adj R	ADJ UNIT PRICE	ORIG COND	YEAR ON	YEAR ACTUAL	Q	% COND	OB/XF MKT VALUE	NOTES
1	0190	FPLC PF	0	100	0	0	1.00	UT	1,200.00	1,200.00	100	0	0	3	100	1,200	
2	0296	SHED METAL	0	100	12	30	360.00	UT	2.50	2.50	100	1993	1993	3	100	900	
3	0252	LEAN-TO W/	0	100	0	0	1.00	UT	0.00	0.00	100	2016	2016	3	100	100	
4	0104	GENERATOR	0	100	0	0	1.00	UT	6,000.00	6,000.00	100	2023	2022		80	4,800	

BUILDING NOTES

BUILDING DIMENSIONS

BAS=[ORIG=0,0] W13 N3 W28 S19 S17 E28 N14 E13 N19 $
UOP=[ORIG=-13,-3] N12 W28 S12 E28 $
FUS=[ORIG=0,-30] N20 W16 S20 E16 $
UOP=[ORIG=0,0] N12 W13 S12 E13 $
UST=[ORIG=-41,16] W6 S17 E6 N17 $
UOP=[ORIG=-13,33] E4 N14 W4 S14 $
.

LAND DESCRIPTION

TOTAL OB/XF 7,000

LN	USE CODE	CLS	LAND USE DESCRIPTION	CAP	RD	LOC ZONE	FRONT	DEPTH	TOT LND UTS	UNIT TYPE	DT	DPTH FACT	% COND	TOT ADJ	UNIT PRICE	ADJ UNIT PRICE	LAND VALUE	OTHER ADJUSTMENTS AND NOTES	YEAR	DENSITY	DECL	FRZ	YR	CONSRV
1	0132	C	SFR RIVER	100		A-1	75.00	442.00	75.00	FF		1.00	1.00	1.00	1,200.00	1,200.00	90,000							

REVIEW DATE 07/15/2024 BY tommy Total Acres: 0.76 Total Land Value: 90,000 Market: 0 Agricultural: 0 Common: 90,000 PRINTED 11/14/2025 BY SYS