LOT 45 SEC 1 THREE RIVERS ESTATE
906-212, DC 1100-841, PB 1137-12

HOBAN PEGGY FAMILY REVOCABLE TRUST DATED MARCH 26,
267 NEW WATERFORD PLACE
LONGWOOD, FL 32779-5655

2026

00-00-00-00561-000

COLUMBIA COUNTY PROPERTY

BUILDING CHARACTERISTICS

ELEMENT	CD	CONSTRUCTION
Exterior Wall	31	VINYL SID 100
Roof Structur	03	GABLE/HIP 100
Roof Cover	14	PREFIN MT 100
Interior Wall	01	MINIMUM 100
Interior Floo	09	PINE WOOD 100
Air Condition	02	WINDOW 100
Heating Type	02	CONVECTION 100
Bedrooms		3 100
Bathrooms		1 100
Frame	01	NONE 100
Stories	1.	1. 100
Architectual	05	CONV 100
Units		0 100
Condition Adj	03	03 100
Kitchen Adjus	01	01 100
Quality	05	05
DOR CODE	0100	SINGLE FAMILY
MAP NUM		MKT AREA 02
NEIGHBORHOOD/LOC	100000.01	1.00/

AREA TYPE	TOTAL GROSS AREA	PCT OF BASE	YEAR	TOT ADJ AREA	SUBAREA MARKET VALUE
BAS	396	100		396	23,117
BAS	900	100		900	52,539
FCP	396	25		99	5,779
FOP	24	30		7	409
FOP	72	30		22	1,284
FSP	360	40		144	8,406
UOP	20	20		4	233
UOP	328	20		66	3,853
TOTALS	2,496			1,638	95,621

MARKET ADJUSTMENTS

TYPE	MDL	EFF. AREA	TOT ADJ PTS	EFF. BASE RATE	REPL. COST NEW	AYB	EYB	ECON	FNCT		NORM	% COND
0100	01	1,638	80.1900	89.81	147,109	1957	1957	0	0	0	35.00	65.00

1 SINGLE FAM 0% - 0 Heated Area: 1296 HX Base Yr

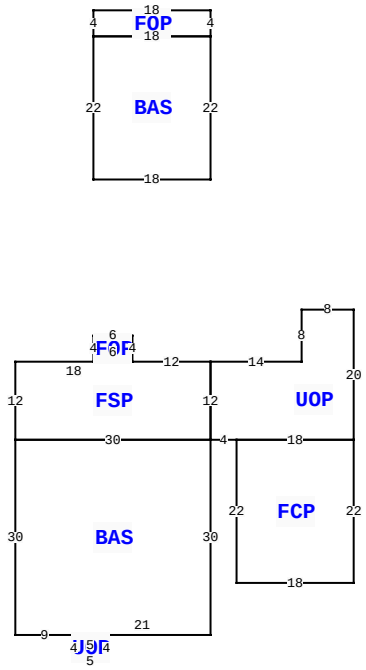

1054 SW RIVERSIDE AVE, FORT WHITE

BLD DATE		LGL DATE	
XF DATE		LAND DATE	
INC DATE		AG DATE	

VALUATION SUMMARY

VALUATION BY	STANDARD
Tax Group: 3	Tax Dist:
BUILDING MARKET VALUE	95,621
TOTAL MARKET OB/XF VALUE	6,757
TOTAL LAND VALUE - MARKET	120,000
TOTAL MARKET VALUE	222,378
SOH/AGL Deduction	0
ASSESSED VALUE	222,378
TOTAL EXEMPTION VALUE	0
BASE TAXABLE VALUE	222,378
TOTAL JUST VALUE	222,378
NCON VALUE	0
INCOME VALUE	
PREVIOUS YEAR MKT VALUE	222,378

PERMIT NUM	DESCRIPTION	AMT	ISSUED
000044110	Roof Replacement	14,000	04/05/2022
19423	ADDN SFR	85	04/12/2002

SALES DATA

OFF RECORD Number	DATE	TYPE INST	Q U	V I	RSN CD	SALE PRICE
1537/2260	3/26/2025	QC	U	I	11	100
GRANTOR: HOBAN PEGGY J						
GRANTEE: HOBAN PEGGY FAMILY						
1164/0609	12/18/2008	PR	Q	I	01	100
GRANTOR: PEGGY J HOBAN AS PER						
GRANTEE: PEGGY J HOBAN						

BUILDING NOTES

BUILDING DIMENSIONS

BAS=[ORIG=0,0] W30 S30 E9 E21 N30 $
FCP=[ORIG=4,0] S22 E18 N22 W18 $
BAS=[ORIG=0,-40] N22 W18 S22 E18 $
FSP=[ORIG=0,0] N12 W12 W18 S12 E30 $
UOP=[ORIG=0,0] E4 E18 N20 W8 S8 W14 S12 $
FOP=[ORIG=0,-62] N4 W18 S4 E18 $
FOP=[ORIG=-12,-12] N4 W6 S4 E6 $
UOP=[ORIG=-21,30] S4 E5 N4 W5 $
.

EXTRA FEATURES

LN	OB/XF CODE	DESCRIPTION	BLD	CAP	L	W	UNITS	UT	Adj R	ADJ UNIT PRICE	ORIG COND	YEAR ON	YEAR ACTUAL	Q	% COND	OB/XF MKT VALUE	NOTES
1	0180	FPLC 1STRY	0	0	0	0	1.00	UT	2,000.00	2,000.00	100	1993	1993	3	100	2,000	
2	0294	SHED WOOD/	0	0	8	12	1.00	UT	0.00	0.00	100	1993	1993	3	100	384	
3	0084	DOCK-RIVER	0	0	0	0	332.00	UT	14.50	14.50	100	1993	1993	3	40	1,926	
4	0084	DOCK-RIVER	0	0	0	0	215.00	UT	14.50	14.50	100	2006	2006	3	40	1,247	
5	0294	SHED WOOD/	0	0	0	0	1.00	UT	0.00	0.00	100	2015	2015	3	100	1,200	

LAND DESCRIPTION

TOTAL OB/XF 6,757

LN	USE CODE	CLS	LAND USE DESCRIPTION	CAP	RD	LOC ZONE	FRONT	DEPTH	TOT LND UTS	UNIT TYPE	DT	DPTH FACT	% COND	TOT ADJ	UNIT PRICE	ADJ UNIT PRICE	LAND VALUE	OTHER ADJUSTMENTS AND NOTES	YEAR	DENSITY	DECL	FRZ	YR	CONSRV
1	0132	C	SFR RIVER	0		A-1	100.00	428.00	100.00	FF		1.00	1.00	1.00	1,200.00	1,200.00	120,000							

REVIEW DATE 04/19/2022 BY JS Total Acres: 0.98 Total Land Value: 120,000 Market: 0 Agricultural: 0 Common: 120,000 PRINTED 11/13/2025 BY SYS