LOT 16 SEC 1 THREE RIVERS ESTATE
973-86, PB 1322-964, QC 1455-156

434 INVESTMENTS LLC
118 CARLYLE DR
PALM HARBOR, FL 34683

2026

00-00-00-00533-016

BUILDING CHARACTERISTICS

ELEMENT	CD	CONSTRUCTION
Exterior Wall	31	VINYL SID 60
Exterior Wall	17	MSNRY STUC 40
Roof Structur	08	IRREGULAR 100
Roof Cover	14	PREFIN MT 100
Interior Wall	05	DRYWALL 100
Interior Floo	14	CARPET 80
Interior Floo	15	HARDTILE 20
Air Condition	03	CENTRAL 100
Heating Type	04	AIR DUCTED 100
Bedrooms		3 100
Bathrooms		2 100
Frame	02	WOOD FRAME 100
Stories	1.5	1.5 100
Architectual	05	CONV 100
Units		0 100
Condition Adj	03	03 100
Kitchen Adjus	01	01 100
Quality	07	07
DOR CODE	0100	SINGLE FAMILY
MAP NUM		MKT AREA 02
NEIGHBORHOOD/LOC	100000.01	1.00/

AREA TYPE	TOTAL GROSS AREA	PCT OF BASE	YEAR	TOT ADJ AREA	SUBAREA MARKET VALUE
BAS	1,892	100		1,892	230,287
FOP	336	30		101	12,293
FOP	712	30		214	26,048
FSP	168	40		67	8,155
FST	1,516	55		834	101,512
FUS	644	100		644	78,386
UOP	196	20		39	4,747
TOTALS	5,464			3,791	461,427

MARKET ADJUSTMENTS

TYPE	MDL	EFF. AREA	TOT ADJ PTS	EFF. BASE RATE	REPL. COST NEW	AYB	EYB	ECON	FNCT		NORM	% COND
0300	01	3,791	131.5291	160.47	608,342	2004	2004	0	0	0	24.15	75.85

1 SFR PILING 0% - 2022 Heated Area: 2536 HX Base Yr

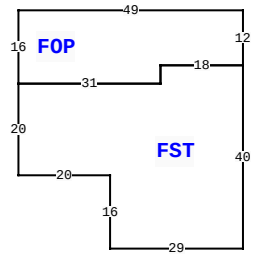

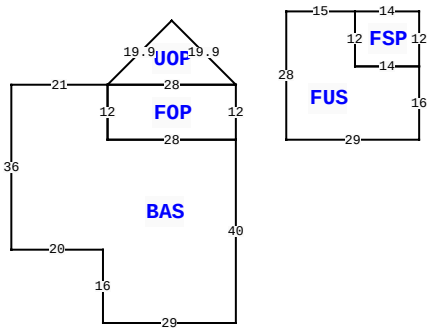

434 SW RIVERSIDE AVE, FORT WHITE

BLD DATE		LGL DATE	
XF DATE		LAND DATE	
INC DATE		AG DATE	

COLUMBIA COUNTY PROPERTY

PAGE 1 of 1 3

VALUATION SUMMARY

VALUATION BY	STANDARD
Tax Group: 3	Tax Dist:
BUILDING MARKET VALUE	461,427
TOTAL MARKET OB/XF VALUE	3,670
TOTAL LAND VALUE - MARKET	120,000
TOTAL MARKET VALUE	585,097
SOH/AGL Deduction	0
ASSESSED VALUE	585,097
TOTAL EXEMPTION VALUE	0
BASE TAXABLE VALUE	585,097
TOTAL JUST VALUE	585,097
NCON VALUE	0
INCOME VALUE	
PREVIOUS YEAR MKT VALUE	592,093

PERMIT NUM	DESCRIPTION	AMT	ISSUED
21002	SFR	398	08/21/2003

SALES DATA

OFF RECORD Number	DATE	TYPE INST	Q U /	V I /	RSN CD	SALE PRICE
1455/1565	12/23/2021	QC	U	I	11	100
GRANTOR: KNAUF HERBERT P III						
GRANTEE: 434 INVESTMENTS LLC						
0973/0086	1/13/2003	WD	Q	V		90,000
GRANTOR: HOWARD HODOR						
GRANTEE: HERBERT P KNAUF & J						

BUILDING NOTES

BUILDING DIMENSIONS

BAS=[ORIG=0,0] N40 W28 N12 W21 S36 E20 S16 E29 $
FST=[ORIG=50,-90] N40 W18 S4 W31 S20 E20 S16 E29 $
FOP=[ORIG=50,-130] N12 W49 S16 E31 N4 E18 $
FUS=[ORIG=40,-40] N16 W14 N12 W15 S28 E29 $
FOP=[ORIG=0,-40] N12 W28 S12 E28 $
UOP=[ORIG=0,-52] U14L14 D14L14 E28 $
FSP=[ORIG=40,-56] N12 W14 S12 E14 $
.

EXTRA FEATURES

LN	OB/XF CODE	DESCRIPTION	BLD	CAP	L	W	UNITS	UT	Adj R	ADJ UNIT PRICE	ORIG COND	YEAR ON	YEAR ACTUAL	Q	% COND	OB/XF MKT VALUE	NOTES
1	0180	FPLC 1STRY	0	0	0	0	1.00	UT	2,000.00	2,000.00	100	2004	2004	3	100	2,000	
2	0169	FENCE/WOOD	0	0	0	0	120.00	UT	13.50	13.50	100	2006	2006	3	100	1,620	
3	0294	SHED WOOD/	0	0	0	0	1.00	UT	0.00	0.00	100	2016	2016	3	100	50	

LAND DESCRIPTION

TOTAL OB/XF 3,670

LN	USE CODE	CLS	LAND USE DESCRIPTION	CAP	RD	LOC ZONE	FRONT	DEPTH	TOT LND UTS	UNIT TYPE	DT	DPTH FACT	% COND	TOT ADJ	UNIT PRICE	ADJ UNIT PRICE	LAND VALUE	OTHER ADJUSTMENTS AND NOTES	YEAR	DENSITY	DECL	FRZ	YR	CONSRV
1	0130	C	SFR WATER	0		A-1	0.00	0.00	100.00	FF		1.00	1.00	1.00	1,200.00	1,200.00	120,000							

REVIEW DATE 03/04/2016 BY DF Total Acres: 0.74 Total Land Value: 120,000 Market: 0 Agricultural: 0 Common: 120,000 PRINTED 11/11/2025 BY SYS