C DIV: N1/2 OF LT OR BLK 11.

372-639, PB 1315-317, PR 1325-12

TRISKAL LLC
4154 NW TELFAIR GLN
LAKE CITY, FL 32055

2025

00-00-00-12660-000

BUILDING CHARACTERISTICS

ELEMENT	CD	CONSTRUCTION
Exterior Wall	19	COMMON BRK 100
Roof Structur	08	IRREGULAR 100
Roof Cover	12	MODULAR MT 100
Interior Wall	05	DRYWALL 100
Interior Floo	07	CORK/VTILE 100
Ceiling	02	F.NOT SUS 100
Air Condition	03	CENTRAL 100
Heating Type	04	AIR DUCTED 100
Fixtures		4 100
Frame	02	WOOD FRAME 100
Story Height		8 100
RMS		5 100
Stories	1.	1. 100
Units		0 100
Condition Adj	03	03 100
Quality	05	05
DOR CODE	1900	PROFESS SVC/BLD
MAP NUM		MKT AREA 06
NEIGHBORHOOD/LOC	850317.00	1.00/

AREA TYPE	TOTAL GROSS AREA	PCT OF BASE	TOT ADJ AREA	SUBAREA MARKET VALUE
BAS	4,050	100	4,050	133,124
CAN	144	30	43	1,414
UOP	110	20	22	723
UST	900	40	360	11,833
TOTALS	5,204		4,475	147,093

MARKET ADJUSTMENTS

TYPE	MDL	EFF. AREA	TOT ADJ PTS	EFF. BASE RATE	REPL. COST NEW	AYB	EYB	ECON	FNCT		NORM	% COND
4900	04	4,475	91.2992	65.74	294,186	1952	1952	0	0	0	50.00	50.00

1 OFFICE LOW – 0% - 0 Heated Area: 4050 HX Base Yr

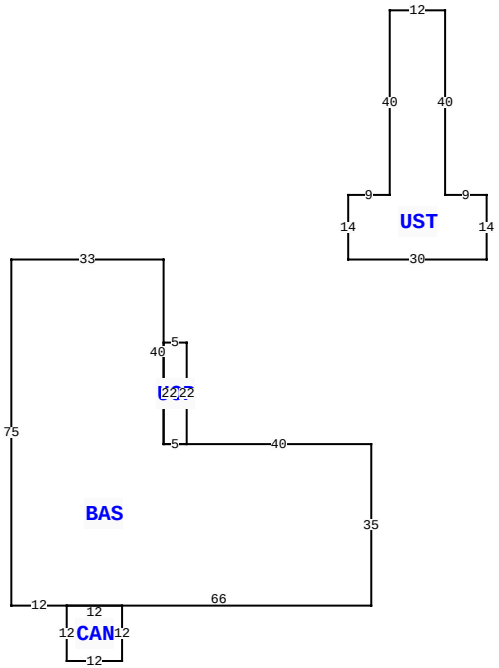

285 NE HERNANDO AVE, LAKE CITY

BLD DATE		LGL DATE	
XF DATE		LAND DATE	
INC DATE		AG DATE	

COLUMBIA COUNTY PROPERTY

PAGE 1 of 1 1

VALUATION SUMMARY

VALUATION BY	STANDARD
Tax Group: 1	Tax Dist:
BUILDING MARKET VALUE	147,093
TOTAL MARKET OB/XF VALUE	3,100
TOTAL LAND VALUE - MARKET	121,814
TOTAL MARKET VALUE	272,007
SOH/AGL Deduction	0
ASSESSED VALUE	272,007
TOTAL EXEMPTION VALUE	0
BASE TAXABLE VALUE	272,007
TOTAL JUST VALUE	272,007
NCON VALUE	0
INCOME VALUE	
PREVIOUS YEAR MKT VALUE	272,007

PERMIT NUM	DESCRIPTION	AMT	ISSUED
20-0449	MAINT/ALTR	195	08/27/2020

SALES DATA

OFF RECORD Number	DATE	TYPE INST	Q U	V I	RSN CD	SALE PRICE
1360/0590	5/11/2018	WD	Q	I	01	315,000
GRANTOR: HERBERT F DARBY AS TR						
GRANTEE: TRISKAL LLC						
1328/1589	1/04/2017	WD	U	I	11	0
GRANTOR: HERBERT F DARBY						
GRANTEE: HERBERT F DARBY AS						

BUILDING NOTES

BUILDING DIMENSIONS

BAS= W33 S75 E12 CAN= S12 E12 N12 W12$ E66 N35 W40 UOP= N22 W5 S22 E5$ W5 N40$ PTR=E40 UST= E30 N14 W9 N40 W12 S40 W9 S14$ W40$.

EXTRA FEATURES

LN	OB/XF CODE	DESCRIPTION	BLD	CAP	L	W	UNITS	UT	Adj R	ADJ UNIT PRICE	ORIG COND	YEAR ON	YEAR ACTUAL	Q	% COND	OB/XF MKT VALUE	NOTES
1	0260	PAVEMENT-A	0	0	0	0	1.00	UT	0.00	0.00	100	0	0	3	100	2,500	
2	0166	CONC,PAVMT	0	0	0	0	1.00	UT	0.00	0.00	100	0	0	3	100	600	

LAND DESCRIPTION

TOTAL OB/XF 3,100

LN	USE CODE	CLS	LAND USE DESCRIPTION	CAP	RD	LOC ZONE	FRONT	DEPTH	TOT LND UTS	UNIT TYPE	DT	DPTH FACT	% COND	TOT ADJ	UNIT PRICE	ADJ UNIT PRICE	LAND VALUE	OTHER ADJUSTMENTS AND NOTES	YEAR	DENSITY	DECL	FRZ	YR	CONSRV
1	1900	C	PROF BLDG	0		CG	0.00	0.00	25,987.00	SF		1.00	1.00	1.25	3.75	4.69	121,814							

REVIEW DATE BY Total Acres: 0.60 Total Land Value: 121,814 Market: 0 Agricultural: 0 Common: 121,814 PRINTED 12/31/2024 BY SYS